North America Product Data Brochure 2012

Insulating Our World

AMS
ADVANCED MATERIAL SCIENCE

Table of Contents

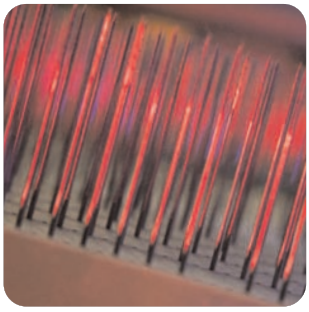

Special Notes about this booklet

Technical Datasheet Codes:
The number is given in the top row of each product table, i.e. 514-205. More product information is available at www.morganthermalceramics.com.

Material Safety Datasheet (MSDS):
Available on our website, www.morganthermalceramics.com, in the Material Safety Datasheet section.

Properties:
The values given herein are **TYPICAL AVERAGE VALUES** obtained in accordance with accepted test methods and are subject to normal manufacturing variations. Actual use limit depends on application, construction, fiber thermal stability, anchoring system, etc. They are supplied as a technical service and are subject to change without notice. Therefore, the data contained herein should not be used for specification purposes. Check with your Morgan Thermal Ceramics office to obtain current information.

Intellectual Property:
SUPERWOOL is a patented technology that manufactures a high temperature insulation wool which has been developed to have a low biopersistence (information upon request). This product may be covered by one or more of the following patents or patent applications, and foreign equivalents: US 5332699, US 5714421, US 5811360, US 5821183, US 5928975, US 5955389, US 5994247, US 6180546, EP 0621858, EP0679145, US 6861381, US 7153796, EP 0710628, EP 1474366, GB 2383793, WO2006/048610. A list of foreign patent numbers is available upon request to The Morgan Crucible Company plc. Saffil is a tradename of Saffil Limited. Maftec is a tradename of Mitsubishi Corporation.

Our Product Overview

Morgan Thermal Ceramics designs, manufactures and installs a broad range of thermal insulation products that significantly reduce energy consumption and emissions in a variety of high temperature processing applications. Our product offering is extensive and covers application needs from Industrial to Commerical markets and is organized into the following categories, with available product forms, typical of the high temperature insulation industry.

Fiber	
• Refractory Ceramic Fiber (RCF)	Bulk, Blanket, Module, Paper, Felt, Board, Shape, Textile, Mastic
• Alkaline Earth Silicate Fiber (AES)	
• Polycrystalline Fiber	
Fired Refractory	
• Firebrick	Brick, Shapes
• Insulating Firebrick (IFB)	
• Monolithics	Cast, Gun, Ram, Vibratory
• Crucibles	Various chemistries
• Fired Shapes	
Specialized Insulation	
• Microporous	Board, Block, Panel, Flexible Liner
• Block	Board, Shape

Fibers
Traditional refractory ceramic fibre (RCF) manufactured by Morgan Thermal Ceramics is a highly versatile material. It can be spun or blown into many of the product forms below. With this wide range of products, Morgan Thermal Ceramics can provide the engineered solution to meet your requirements.

Low biopersistent, alkaline earth silicate (AES) fibers, Superwool fibers that have been uniquely engineered to offer advantages in high temperature insulation applications. These lightweight wool fibres are manufactured using QS9000/ISO 9002 certified processes.

Fired Refractory
Firebrick from Morgan Thermal Ceramics are available for temperature use up to 3250°F (1788°C) and marketed as SR-90 and SR-99. The Insulating Firebrick (IFB) are manufactured into K® brand with very low thermal conductivity and high hot load strengths. TJM and JM IFB have the ability to withstand chemical attack and high heat conditions. Both wet and dry mortars are available that are matched for use with our IFB.

Fired Refractory Crucibles and Shapes are individually crafted as Cerox®, MRI®and Valcor®. Crucibles and fired shapes hold up under harsh conditions. With various alumina-silica, high-alumina and alumina-silica-zirconia compositions, these materials offer excellent hot strengths and resistance to thermal shock and molten metals.

Monolithics are available in Insulating, Dense and Special Duty Monolithics. World recognized branding, the Tri-Mor® line of Kaocrete® dense monolithic has been proven ideal for applications that require strong, easy to place and economical materials. Tri-Mor Kaolite® insulating monolithics provide low thermal conductivity values, ease of installation and superior performance in petrochemical applications. The Tri-Mor line of special duty monolithics such as Kao-Tuff®, Plascast/Plasgun® and Kao-Tab® feature specifically enhanced properties such as resistance to corrosion, abrasion and reducing atmospheres.

Specialized Insulation
Microporous insulation is available under the BTU-BLOCK™ brand in for industrial and OEM markets. The BTU-BLOCK lines is specially formulated and designed for applications such as ladle liner back-up insulation for Iron and Steel and board back-up insulation in Ethylene crackers. These lightweight, high compressive strength materials are the most thermally efficent insulation available.

Block insulation is marketed under the TR® product offering manufactured from vermiculite and diatomaceous silica. The product can be made into exact customer specifications as boards or shapes.

Bulks Overview

Morgan Thermal Ceramics bulk fibers serves as the foundation for our entire line of fiber products.

- needled into a blanket
- converted into paper boards and shapes
- woven into yarn to produce rope and cloth
- blended into liquid binders for coatings and cements

Bulk fibers can be engineered by changing length, fiber diameter, shot content and lubricity. They offer unique solutions to many industrial applications such as expansion joint construction and base seals as well as automotive applications in filtration and acoustical insulation.

Kaowool® Bulks
- Bulk fiber manufactured from kaolin clay

Cerafiber®
- Bulk manufactured from a high purity blend of alumina and silica

Cerachem®
- Bulk manufactured from a high purity blend of alumina-zirconia-silica raw materials

Cerachrome®
- Formulated from high purity alumina-silica-chromia raw materials

Maftec®
- Produced from mullite and alumina fibers
- Low shot content with exceptional temperature resistance

Saffil®
- High-purity alumina fibers for performance at elevated temperatures

Superwool®
- Highly flexible synthetic vitreous fibers
- Exonerated from any carcinogenic classification in the countries of the European Union under the provisions of Nota Q of the European Commission Directive 97/69/EC

Engineered Fibers
- Application temperature, reactions, hardness of fiber, and strength of fiber
- Reinforcing or filling
- Appearance, wear characteristics, and stress risers
- Tailored matrix work

Bulks

MSDS Number	350	350	350	201	201	201	201	201	201
Technical Datasheet Number	1114-100	1114-100	1114-100	514-200	514-200	514-200	514-200	514-200	514-200
Product Name	Superwool® 607®	Superwool Plus	Superwool HT	Kaowool®	Kaowool RT	Cerafiber®	Cerachem®	Cerachrome®	Saffil®
Color	white	white	white	off white	off white	white	white	blue/green	white
Continuous Temperature Use Limit, °F	1832	1832	2102	2000	2150	2150	2400	2500	2800
Classification Temperature Rating, °F	2012	2192	2372	2300	2400	2400	2600	2600	2900
Specific Heat, BTU/lb•°F @ 1800°F	-	-	-	0.26	0.26	0.26	0.26	0.26	0.25
Fiber Tensile Strength, psi	-	-	-	1.5×10^6	-	-	-	-	2.9×10^6
Fiber Length, in.	-	-	-	½ - 4	½ - 4	½ - 10	½ - 10	½ - 10	¼ - 4
Chemical Analysis, %, Weight Basis After Firing									
Alumina, Al_2O_3	-	-	-	45	35 - 47	46	35	43	95-97
Silica, SiO_2	60 - 70	62 - 68	70 - 80	50 - 55	49 - 54	54	50	54	3-5
Calcium oxide + Magnesium oxide, CaO + MgO	29 - 42	29 - 39	18 - 25	0.1	0.1	0.1	0.1	0.1	-
Ferric oxide, Fe_2O_3	-	-	-	1.0	0.05 - 1.5	0.05	0.05	-	-
Titanium oxide, TiO_2	-	-	-	1.7	0.05 - 1.9	-	-	-	-
Alkalies as Na_2O	-	-	-	0.2	0.2	0.2	0.2	-	-
Boron oxide, B_2O_3	-	-	-	0.08	-	-	-	-	-
Chromium oxide, Cr_2O_3	-	-	-	-	-	-	-	3	-
Zirconia, ZrO_2	-	-	-	-	0 - 15	-	15	-	-
Other	trace	<1	<3	-	0 - 3	trace	trace	trace	-
Leachable Chlorides	-	-	-	1 - 2	0 - 3	trace	trace	trace	-

Notes:
Lubricated and unlubricated fibers are available in Superwool, Kaowool and all Cera bulk products. For more information reference Price Book pages for Bulk fibers. Bulks are packaged in bags and cartons.

Blankets Overview

Morgan Thermal Ceramics blankets are available in a wide range of chemistries, densities and dimensions. Blankets are air laid into a continuous mat and mechanically needled for added strength and surface integrity.

Common characteristics are:
- low thermal conductivity
- excellent thermal shock resistance
- low heat storage capacity
- inorganic - smoke free

AES Blankets

Superwool 607® and Superwool Plus
- Temperature use limit of 2012°F and 2192°F (1100°C and 1200°C)
- Exceptional thermal insulating performance
- Binder and lubricant free

Superwool HT
- Temperature use limit of 2372°F (1300°C)
- Highly effective for both high-temperature insulating applications and non-wetting to aluminum
- Low biopersistent

RCF Blankets

Kaowool® Blanket
- Original kaolin grade blanket
- Maximum temperature rating of 2300°F (1260°C)

Kaowool RT Blanket
- Maximum temperature rating of 2300°F (1260°C)
- Produced from a high quality alumina, silica and kaolin using the spinning process

Cerablanket®
- Maximum temperature rating of 2400°F (1316°C)
- Produced from a high-purity blend of alumina-silica
- Recommended for reducing atmospheres or where low percentage of iron oxide and titania are required

Cerachem® Blanket
- Maximum temperature rating of 2600°F (1427°C)
- Produced from a high purity synthetic blend of alumina-zirconia-silica
- Resists excessive shrinkage at elevated temperatures

Cerachrome® Blanket
- Maximum temperature rating of 2600°F (1427°C)
- Produced from a synthetic blend of alumina-silica-chromia
- Well-suited for hot face lining applications in forging and reheating applications

Maftec® Blanket
- Maximum temperature rating of 2900°F (1593°C)
- Produced from mullite fiber
- Offers exceptional high-temperature resistance

Saffil® Blanket
- Maximum temperature rating of 2912°F (1600°C)
- Produced from high purity poly-crystalline alumina fiber
- Lowest possible shot content

Blankets

MSDS Number	350	350	350	201	201	201	201	201
Technical Datasheet Number	1114-105	1114-105	1114-105	514-205	514-205	514-205	514-205	514-205
Product Name	**Superwool® 607®**	**Superwool Plus**	**Superwool HT**	**Kaowool®**	**Kaowool RT**	**Cerablanket®**	**Cerachem**	**Cerachrome**
Color	white	white	white	off white	off white	white	white	blue/green
Density, pcf	4, 6, 8, 10	4, 6, 8, 10	4, 6, 8	3, 4, 6, 8, 10, 12	4, 6, 8	4, 6, 8	6, 8	6, 8
Thickness, in.	¼, ½, 1, 1½, 2	¼, ½, 1, 1½, 2	¼, ½, 1, 1½, 2	⅛,¼, ½, 1, 1½, 2	½, 1, 1½, 2	¼, ½, 1, 1½, 2	1, 1½, 2	1, 1½, 2
Continuous Temp. Use Limit, °F	1832	1832	2102	2000	2000	2150	2400	2500
Classification Temp. Rating, °F	2012	2192	2372	2300	2300	2400	2600	2600
Chemical Analysis, %, Weight Basis After Firing								
Alumina, Al_2O_3	trace	trace	trace	45	35 - 47	46	35	43
Silica, SiO_2	60 - 70	62 - 68	70 - 80	50 - 55	49 - 54	54	50	54
Calcium oxide + Magnesium oxide, CaO + MgO	29 - 42	29 - 39	18 - 25	0.1	1	1	1	-
Zirconia, ZrO_2	-	-	-	-	0 - 15	-	15	-
Ferric oxide, Fe_2O_3	-	-	-	1.0	0.05 - 1.5	0.05	0.05	-
Titanium oxide, TiO_2	-	-	-	1.7	0.05 - 1.9	-	-	-
Alkalies as NaO_2	-	-	-	0.2	0.2	0.2	0.2	-
Other	trace	<1	<3	0.08	0 - 3	trace	trace	3
Leachable chlorides	-	-	-	1 - 2	0 - 3	trace	trace	trace
Thermal Conductivity, BTU•in./hr•ft²•°F, ASTM C 201								
measured density, pcf	8	8	8	8	8	8	8	8
mean temp. @ 500°F	0.42	0.39	0.35	0.44	0.44	0.44	0.44	0.44
@ 1000°F	0.88	0.73	0.83	0.87	0.93	0.93	0.93	0.93
@ 1500°F	1.53	1.28	1.66	1.45	1.60	1.60	1.60	1.60
@ 1800°F	-	-	-	1.83	2.05	2.05	2.05	2.05
@ 1832°F	2.00	1.73	-	-	-	-	-	-
@ 2000°F	-	-	2.77	2.09	-	2.34	2.34	2.34

Blankets

MSDS Number	223	204	204
Technical Datasheet Number	-	-	-
Product Name	**Maftec® Blanket**	**Saffil® Mat**	**Saffil Blanket**
Color	white	white	white
Density, pcf	6, 7, 8	2.2	6
Thickness, in.	1	1.38	½, 1
Continuous Temp. Use Limit, °F	2700	2800	2800
Classification Temp. Rating, °F	2900	2900	2900
Chemical Analysis, %, Weight Basis After Firing			
Alumina, Al_2O_3	72	95 - 97	95 - 97
Silica, SiO_2	28	3 - 5	3 - 5
Leachable chlorides	-	trace	-
Thermal Conductivity, BTU•in./hr•ft²•°F, ASTM C 201			
measured density, pcf	**8**	**2.2**	**6**
mean temp. @ 500°F	0.43	0.46	0.36
@ 1000°F	0.88	1.06	0.63
@ 1500°F	1.64	2.13	1.08
@ 1800°F	2.19	2.87	1.39
@ 2000°F	2.57	3.37	1.61

Blankets - Hardware

Product Description
Kao-Lok Anchors, Washers and Studs are a combination refractory and stainless steel designed to be used with Thermal Ceramics blanket wallpaper furnace linings.

Kao-Lok Anchor Systems have been one of the preferred methods of installing ceramic fiber wallpaper lining systems for more than 30 years.

Kao-Lok Studs in lengths of 3½" (87.5mm) and longer have five notches which allow adjustment in compressing the blanket when installing the Kao-Lok Washer or the cone anchor. Stud lengths less than 3½" (87.5mm) have only two notches.

Kao-Lok Washers are designed so the washer allows for ease of handling. When properly installed, the washer will remain in place on roofs and in severe vibration applications.

Kao-Lok Ceramic Cone Anchors can be used in lengths of 1" and 2" (25mm and 50mm), with or without plug, to service temperatures up to 2300°F (1260°C). The Cone Anchor is made from a 50% Al_2O_3, 47% SiO composition. The void in the cone anchor is normally packed with Kaowool® Bulk or Kaowool Moldable. A 4"(100mm)-diameter washer with a 15/8" (40.6mm) I.D. hole with a stress relief slot is available for use with the cone anchors to cover a larger surface area to spread the weight and load of the insulation materials.

Kao-Lok Speed Clips are available in the following metals:
• mild steel • 304SS • 310SS • 330SS • Inconel 601

These 1½" (37mm) -square 26-gauge thick interference fit washers are very useful when installing ceramic fiber linings using Kao-Lok Studs.

Features
- Studs and washers available in 304SS, 310SS, 330SS, and Inconel 601 for use up to 2050°F (1121°C)
- Design of Kao-Lok anchor permits quick installation
- Ceramic cone anchor available as closure to increase use temperatures up to 2300°F (1260°C)

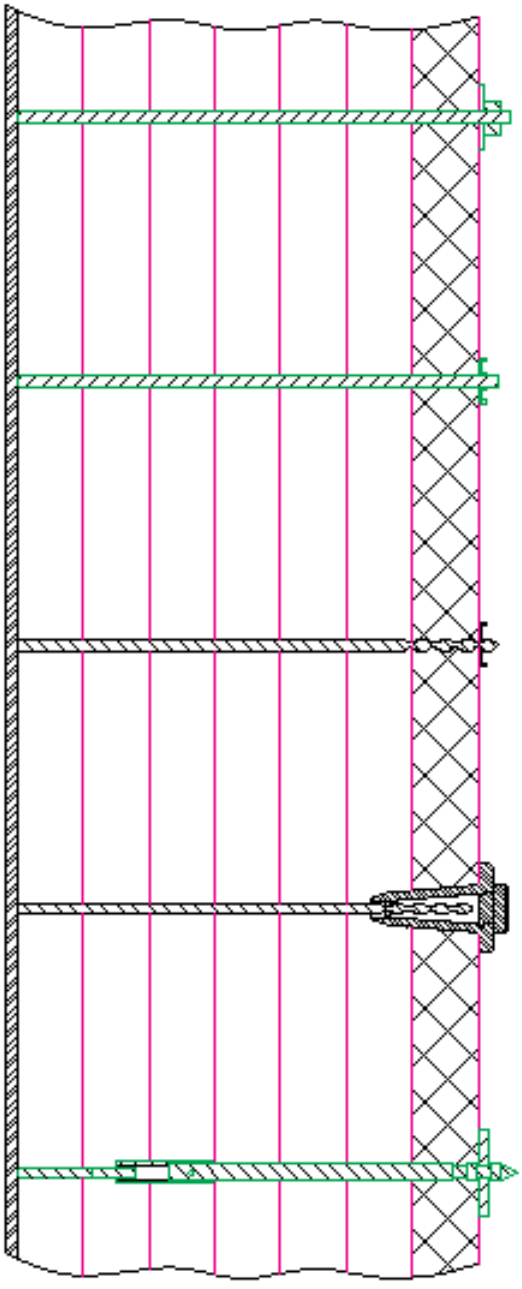

BOARD/BLANKET LINING ANCHOR SYSTEMS

Modules Overview

Morgan Thermal Ceramics exclusive Pyro-Bloc® products have set the standard for quality and versatility in furnace and boiler lining systems since their introduction in 1974. Pyro-Bloc modules are manufactured from Pyro-Log™, a monolithic ceramic fiber that is fabricated into modules that offer superior performance and durability.

Pyro-Bloc modules are available in uncompressed module densities up to 15 pcf and in RCF (3 grades) and Superwool:

- R Grade: alumina - silica
- ZR Grade: alumina - zirconia - silica
- C Grade: alumina - silica - chromia
- Superwool: AES - alkaline earth silicate

Pyro-Bloc modules combine the insulating material advantages of ceramic fiber with rapid furnace installation. These modules are lightweight, have low heat storage and provide durable service.

Pyro-Bloc Y and Y^2 Modules

- Place and shoot module installation design
- Compresses in all directions to maximize module to module and module to shell contact reducing likelihood of gaps during service

Pyro-Bloc M and M^2 Modules

- Pre-welded studs attachment method
- Designed for installation over corrosion and vapor barriers, back-up linings

Pyro-Bloc Corner Bloc

- Cut into special shapes to go into flues, furnace openings or around corners

Pyro-Bloc T-Bar Module

- Recommended attachment method for Corner Blocs used with M modules lining designs

Pyro-Bloc Burner Bloc

- Vacuum-formed sleeve is mounted in the center of the module
- Lightweight, thermally efficient, thermal shock resistant module

Pyro-Packing™ and Pyro-Log

- Uncompressed monolithic ceramic fiber block manufactured in R, ZR and C grades
- Used to fill smaller areas or voids in the ceramic fiber linings to eliminate special shapes

Pyro-Bloc HS Module

- Proprietary hardening agent that enhances hardness and strength with minimal firing, yet allows the module to remain compressible during installation
- Preferred choice for applications requiring resistance to high mechanical abuse

Pyro-Bloc Plus Module

- Dual component design consisting of a Pyro-Bloc module base with a high temperature fiber veneer
- Two-layer arrangement provides high temperature capability up to 3000°F

Modules Overview

Pyro-Fold™ and Pyro-Stack™ modules incorporate all the advantages of our standard blanket products in a pre-compressed modular form and offer non-exposed anchoring, economical installation and a positive mechanical attachment. Available in a variety of traditional RCF grades as well as AES low biopersistent Superwool fiber grades.

Pyro-Fold Modules
- Accordion-folded blanket module that uses the Pyro-Bloc hardware and anchoring systems

Pyro-Stack Modules
- Blanket cut and stacked edge-grain that uses the Pyro-Bloc hardware and anchoring systems

Z-Blok® Modules
- Z-Blok II - C-Channel that runs parallel to the module folds and is typically attached to the steel casing with a welded stud and nut

Unibloc™ Modules
- Economical, folded modules that use external attachment methods
- Made from a variety of ceramic fiber blankets

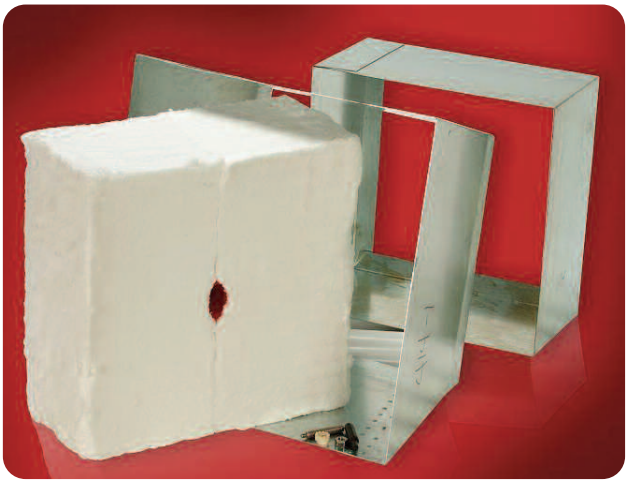

Veneering Modules are a complete system that offers a range of modules, cements, and coatings to suit specific applications. Veneering products, designed for hot face application over existing refractory linings, produce a significant reduction in heat loss through the refractory lining without requiring its replacement.

They are suitable for placement over refractory monolithics, brick, rammed plastic, or ceramic fiber modules. They provide upgraded thermal efficiency, greater thermal stability, and resistance to chemical attack. Veneering modules feature properties such as low shrinkage, long-term adherence, and durability in a variety of severe applications.

Unifelt™ Veneering Modules
- High temperature grade ceramic fiber or high alumina felt modules
- Three grades, 3000 HT, 3000 M and XT with temperature use limit up to 3000°F (1649°C)
- 12"x12" modules using precut Unifelt boards turned edge-grained and glued together

Kaowool® Veneering Modules
- High temperature grade Cerablanket, Cerachem or Cerachrome blanket modules
- 12"x12" modules using fiber strips turned edge-grained and compressed with a gauze type wrap

Pyro-Bloc Veneering Modules
- Made from Pyro-Log fiber in grades R (alumina-silica) and ZR (alumina-silica-zirconia)

Unikote™ Coatings
- M, 2600°F (1427°C) and S, 2800°F (1538°C) grades
- Applied to protect module hot face from shrinkage and chemical attack

K-Bond™ Mortar
- Extra smooth, creamy consistency

Modules - Pyro-Bloc

MSDS Number	201	201	252	600	201	201	252	229
Technical Datasheet Number	514-500	514-500	514-500	1114-160	514-503	514-503	514-503	514-504
Product Name	Pyro-Bloc® Y, Y², M, M²				Pyro Log			Pyro-Bloc HS
	R Grade	ZR Grade	C Grade	*Superwool	R Grade	ZR Grade	C Grade	HS Grade
Color	white	white	blue/green	white	white	white	blue/green	white
Density, pcf	8, 10, 12, 15	10, 12, 15	12	10, 12	8, 10, 12, 15	10, 12, 15	12	23
Thickness, in.	3 - 12	3 - 12	3 - 12	3 - 12	6, 8	6, 8	6	3 - 12
Continuous Temperature Use Limit, °F	2200	2450	2500	2200	2200	2450	2500	2000
Maximum Temperature Rating, °F	2400	2600	2600	2300	2400	2600	2600	2200
Melting Point, °F	3200	3200	3200	2730	3200	3200	3200	-
Chemical Analysis, %, Weight Basis After Firing								
Alumina, Al_2O_3	47	37.5	43	trace	47	37.5	43	-
Silica, SiO_2	53	47	54	70 - 80	53	47	54	-
Zirconia, ZrO_2	-	15.5	-	-	-	15.5	-	-
Chromium oxide, Cr_2O_3	-	-	3	-	-	-	3	-
Clacium oxide + Magnesium oxide, CaO+MgO	-	-	-	18 - 25	-	-	-	-
Loss on ignition, L.O.I.	trace	trace	trace	-	-	-	-	-
Other	trace	trace	trace	<3	trace	trace	trace	trace
Thermal Conductivity, BTU•in./hr•ft²•°F, ASTM C 201								
measured density, pcf	12	12	12	10	8	10	12	23
mean temperature, @ 500°F	0.50	0.50	0.50	0.51	0.53	0.52	0.50	0.58
@ 1000°F	0.95	0.95	0.95	0.98	1.13	1.04	0.96	0.98
@ 1500°F	1.66	1.66	1.66	1.71	1.97	1.81	1.66	1.57
@ 2000°F	2.45	2.45	2.45	2.68	2.95	2.69	2.45	2.24

* Call for availability

Modules - Folded and Stacked Blankets

MSDS Number	350	350	350	201	201	252	223	204
Technical Datasheet Number	1114-130	1114-130	1114-130	514-510	514-510	514-510	-	-
Product Name	Pyro-Fold®, Unibloc®, Z-Blok®						Pyro-Stack®	
	Superwool® 607®	Superwool Plus	Superwool HT	Cerablanket® HP	Cerachem® ZR	Cerachrome® CR	Maftec®	Saffil®
Color	white	white	white	white	white	blue/green	white	white
Density, pcf	8, 9.3	8, 9.3	8, 9.3	8, 9.3, 10.7	8, 9.3, 10.7	9.3, 10.7	7, 8	4.5, 6
Thickness, in.	4 - 12	4 - 12	4 - 12	4 - 12	4 - 12	4 - 12	4 - 12	4 - 12
Continuous Temperature Use Limit, °F	1832	1832	2200	2200	2450	2500	2700	2800
Maximum Temperature Rating, °F	2012	2192	2300	2400	2600	2600	2800	2900
Melting Point, °F	2680	2680	2730	3200	3200	3200	-	>3600
Chemical Analysis, %, Weight Basis After Firing								
Alumina, Al_2O_3	trace	trace	trace	46	35	43	72	95 - 97
Silica, SiO_2	60 - 70	62 - 68	70 - 80	54	50	54	28	3 - 5
Calcium oxide + Magnesium oxide, CaO + MgO	29 - 42	29 - 39	18 - 25	-	-	-	-	-
Zirconia, ZrO_2	-	-	-	-	15	-	-	-
Chromium oxide, Cr_2O_3	-	-	-	-	-	3	-	-
Other	-	<1	<3	trace	trace	trace	trace	-
Thermal Conductivity, BTU•in./hr•ft²•°F, ASTM C 201								
measured density, pcf	8	8	8	9.3	9.3	9.3	7	6
mean temperature, @ 500°F	0.46	0.40	0.46	0.50	0.50	0.50	0.67	0.63
@ 1000°F	0.98	0.75	0.98	0.98	0.98	0.98	1.50	1.14
@ 1500°F	1.85	1.50	2.01	1.66	1.66	1.66	2.91	2.18
@ 2000°F	-	-	3.28	2.45	2.45	2.45	4.59	3.48

Modules - Veneering

MSDS Number	201	201	252	201	201	252	223	224	261	223	261
Technical Datasheet Number	514-507	514-507	514-507	514-507	514-507	514-507	514-507	514-507	514-507	514-507	514-507
Product Name	**Kaowool®**			**Pyro-Bloc®**			**Maftec®**	**Saffil®**	**Unifelt®**		
	HP	ZR	C	R Grade	ZR Grade	C Grade			3000 (HT)	3000M	XT
Color	white	white	blue/ green	white	white	blue/ green	white	white	pink	yellow	orange
Density, pcf	8, 10	8, 10	8, 10	10, 12, 15	10, 12, 15	12	7	6	7	7	9
Thickness, in.	2, 3, 4	2, 3, 4	2, 3, 4	2, 3, 4	2, 3, 4	2, 3, 4	2, 3, 4	2, 3, 4	2, 3, 4	2, 3, 4	2, 3, 4
Continuous Temperature Use Limit, °F	2150	2400	2450	2150	2400	2500	2700	2800	2800	2800	2900
Maximum Temperature Rating, °F	2400	2600	2600	2400	2600	2600	2800	3000	3000	3000	3100
Melting Point, °F	3200	3200	3200	3200	3200	3200	-	-	3200	3200	3300
Chemical Analysis, %, Weight Basis After Firing											
Alumina, Al_2O_3	46	35	43	47	37.5	43	72	95 - 97	72	62	87
Silica, SiO_2	54	50	54	53	47	54	28	3 - 5	28	38	13
Zirconia, ZrO_2	-	15	-	-	15.5	-	-	-	-	-	-
Chromium oxide, Cr_2O_3	-	-	3	-	-	3	-	-	-	-	-
Loss on ignition, L.O.I.	-	-	-	trace	trace	-	-	-	5	6	5
Other	trace	trace	trace	trace	trace	trace	trace	-	trace	trace	trace
Thermal Conductivity, BTU•in./hr•ft²•°F, ASTM C 201											
measured density, pcf	8	10		10	12		7	6	7	7	9
mean temperature, @ 500°F	0.57	0.55		0.52	0.50		0.43	0.36	0.86	0.61	0.87
@ 1000°F	1.14	0.99		1.04	0.96		0.88	0.63	1.06	1.15	1.01
@ 1500°F	1.93	1.66		1.81	1.66		1.64	1.08	1.45	2.10	1.31
@ 2000°F	2.82	2.45		2.69	2.45		2.57	1.61	2.10	3.62	1.82

Modules Dimensions

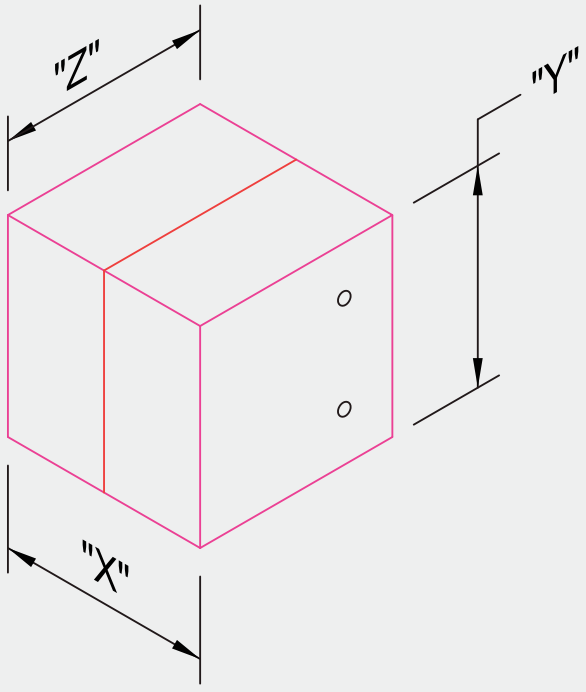

Module dimensions are listed within product descriptions in the following order:

X (width) x Y (height) x Z (thickness)

Standard Pyro-Bloc Module

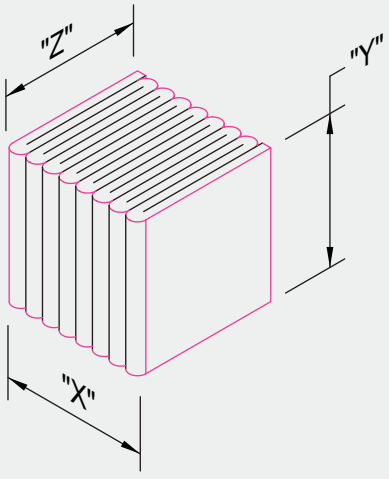

Folded Modules

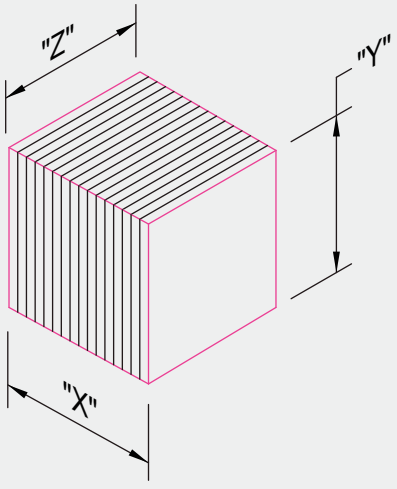

Stacked and Veneering Modules

Paper Overview

Morgan Thermal Ceramics manufactures the widest range of high temperature rated paper products in the marketplace. We meet requirements ranging from economical mineral wool grades to high purity alumina and alumina-silica grades for demanding applications. In addition, we carry a full range of high temperature, low biopersistent Superwool fiber papers for use where required by government or industry health regulations.

Paper products are manufactured under ISO9001:2008 requirements. Many of our paper products also meet strict automotive, aerospace, and industry specifications. From this extensive list of product offerings, you can be sure to find the right paper to meet your high temperature paper needs.

RCF Fibers

400-LS Paper
- Low-shot, utility grade mineral fiber paper rated to 1500°F (816°C)

Kaowool® 333-E
- Intumescent, expandable (up to 400%) paper rated to 2100°F (1760°C), easily die-cut for high-temperature gasketing and seals

Kaowool Flex-Wrap
- Flexible paper featuring low organic content with temperature rating up to 2300°F (1260°C)

Kaowool 500
- Utility-grade ceramic fiber paper with a temperature rating of up to 2300°F (1260°C)

Kaowool 700
- Features high tensile strength with a temperature rating of up to 2300°F (1260°C)

Kaowool 900
- Low-shot version of 700 grade, rated to 2300°F (1260°C) for improved thermal conductivity

Kaowool 2000
- Premium-grade, very low shot paper featuring excellent surface finish and texture, with a temperature rating of 2300°F (1260°C)

K-Shield™ BF
- Organic-free, low shot paper featuring good handling characteristics with temperature rating up to 2400°F (1316°C)

Kaowool 2600
- High-temperature paper rated to 2600°F (1427°C)

Kaowool 3000
- High alumina fiber paper with less than 1% shot and a temperature rating of 3000°F (1649°C)

AES Fibers

Superwool 607®
- Superwool based paper with a continuous use limit of 1832°F (1000°C)

Superwool 607 Flex-Wrap
- Flexible, low organic Superwool based paper with a continuous use limit of 1832°F (1000°C)

Superwool HT
- The only low biopersistent paper with a use limit of 2372°F (1300°C)

Superwool 607 332-E
- Inorganic paper with a continuous use limit of 1300°F (704°C)

Superwool 607 406-E
- Expandable paper with a continuous use limit of 1832°F (1000°C)

Papers

MSDS Number	357	353	353	353	266	231	205	202	202	202	202	272	202	204
Technical Datasheet Number	1114-120	1114-120	1114-120	1114-120	514-801	514-801	514-801	514-801	514-801	514-801	514-801	514-805	514-801	514-801
Product Name	Superwool®				400-LS	Kaowool® 333-E	Flex Wrap	500 Grade	700 Grade	900 Grade	2000 Grade	K-Shield® BF	2600 Grade	3000 Grade
	607® 332-E	607	607 Flex-Wrap	HT										
Color	white	white	white	white	off white	grey	white	white	white	white	white	white	white	white
Density, compressed 4 pcf	11-14	11- 13	11-13	11-13	12 - 15	15-18	11-13	12-14	11-13	10-12	11-14	8-10	10-13	7-10
Thickness, in., (4 lb/ft^2)	1/32 - 1/4	1/16 - 1/4	1/16 - 1/4	1/16 - 1/4	1/16 - 1/4	1/16 - 1/4	1/16 - 1/4	1/32 - 1/4	1/32 - 1/4	1/32 - 1/4	1/32 - 1/4	1/32 - 1/4	1/16 - 1/4	1/32 - 1/4
Continuous Temperature Use Limit, °F	1300	1832	1832	2102	1350	2100	2150	2150	2150	2150	2150	2300	2450	2800
Max. Temperature Rating, °F	-	2012	2012	2372	1500	2300	2300	2300	2300	2300	2300	2400	2600	3000
Melting Point, °F	1800	2327	2327	2552	2000	3200	3200	3200	3200	3200	3200	3200	3200	3600
Fiber Index, %	-	-	-	-	70	55	50	50	55	70	80	75	55	99
Tensile Strength, psi	>20	>65	>25	>50	40-75	>40	35-50>25	75-100	85-125	75-100	75-100	15-25	75-100	25-40
Fired Tensile Strength, psi	-	-	-	-	5 - 10	5 - 10	2 - 3	2 - 3	2 - 3	2 - 3	2 - 3	15 - 25	2 - 3	-
Chemical Analysis, %, Weight Basis After Firing														
Alumina, Al_2O_3	-	trace	trace	trace	15	42	47	47	47	47	47	51	35	95
Silica, SiO_2	65	60-70	60-70	60-70	43	48	53	53	53	53	53	49	51	5
Zirconia, ZrO_2	-	-	-	-	-	-	-	-	-	-	-	-	14	-
Calcium oxide + Magnesium oxide, CaO + MgO	30	25-35	25-35	16-22	21	-	-	-	-	-	-	-	-	-
Loss on ignition, L.O.I.	0.5 max	5-10	2-5	5-10	5-10	12-13	3-7	6-10	6-10	6-10	6-10	0.5 max	6-10	6-10
Other	5	1	1	<1	22	10	trace	trace	trace	trace	trace	trace	trace	trace
Thermal Conductivity, BTU•in./hr•ft^2•°F, ASTM C 201														
mean temperature @ 500°F	0.35	0.39	0.39	0.39	0.36	-	0.39	0.43	0.40	0.38	0.38	0.38	0.37	0.36
@ 1000°F	0.53	0.65	0.65	0.65	0.58	-	0.69	0.69	0.63	0.61	0.56	0.59	0.63	0.53
@ 1300°F	-	-	-	-	0.77	-	-	-	-	-	-	-	-	-
@ 1500°F	-	1.04	1.04	1.02	-	-	0.96	1.07	0.95	0.94	0.80	0.85	1.02	0.80
@ 1800°F	-	1.35	1.35	-	-	-	-	-	-	-	-	-	-	-
@ 2000°F	-	-	-	1.52	-	-	-	1.58	1.38	1.40	1.11	1.18	1.57	1.20
@ 2500°F	-	-	-	-	-	-	-	-	-	-	-	-	-	1.78

Felt Overview

Morgan Thermal Ceramics manufactures a range of high temperature felt products in two of our North American manufacturing locations.

Cerafelt® and Cerachrome® Felt are made in a unique manufacturing process which allows a wide thickness and density range. Both products are recommended for high temperature industrial applications such as expansion joints in kilns, furnaces, and boiler walls. When used as a gasket, Cerafelt exhibits excellent resistance to penetration from molten metal both ferrous and non-ferrous. This unique property coupled with its ease of fabrication makes it ideal for ingot stool seals and stopper rod gaskets.

The K-Shield® Felt range of products are manufactured on the same line as the high temperature paper products. This manufacturing process allows excellent, uniform material density and thickness control. In addition, the lightweight, flexible nature of this product allows it to be packaged in roll form. K-Shield Felts are made from very clean, high purity ceramic fibers.

Superwool 607 HT Felt, a classification temperature of 2372°F (1300°C), is an insulating felt obtained by hot pressing. The felt optimises the manufacture of complex, die cut shapes to close tolerances. Superwool 6047 HT Felt is made from chemically stable fibers, lightweight and is a very insulating product.

Cerafelt
- Flexible sheet insulation rated to 2300°F (1260°C) and available in densities from 4 to 24 pcf

Cerachrome Felt
- Similar properties to Cerafelt but rated to 2600°F (1427°C) in densities from 6 to 24 pcf

K-Shield Felt
- Premium low shot felt rated at 2300°F (1260°C) in 6 pcf density

K-Shield Felt LS
- Low shot version of K-Shield Felt for lower thermal conductivity performance

K-Shield Felt AG
- Designed specifically for aerospace applications and meets both BMS9-19 and AMS3680-Rev C specifications
- Manufactured in 6 pcf and rated to 2300°F (1260°C)

Superwool 607 HT Felt
- Densities ranging from 4 up to 18 pcf

Felts

MSDS Number	361	258	255	258	258	258
Technical Datasheet Number	1114-140	514-804	514-804	514-803	514-803	514-803
Product Name	**Superwool 607 HT Felt**	**Cerafelt®**	**Cerachrome**	**K-Shield®**	**K-Shield LS**	**K-Shield AG**
Color	yellow	cream/tan	blue/green	tan	tan	tan
Density, Compressed (4 lb/ft^2), pcf	4 up to 18	4,6,8,10,12,18,24	6,8,12,24	6	6	6
Thickness, in.	1/4 - 1	1/8 - 1	1/4 - 1	1/4 - 1/2	1/4 - 1/2	1/4 - 1/2
Continuous Temperature Use Limit, °F	-	2150	-	2300	2300	2300
Classification Temperature Rating, °F	2372	2300	2600	2400	2400	2400
Fiber Index, %	-	-	-	65 - 70	75 - 80	62 - 70
Tensile Strength, psi	-	-	-	10 - 20	10 - 20	5 - 10
Fired Tensile Strength, psi	-	-	-	5	5	5
Chemical Analysis, %, Weight Basis After Firing						
Alumina, Al_2O_3	-	46	43	51	51	51
Silica, SiO_2	70 - 80	54	54	49	49	49
Chromium oxide, Cr_2O_3	-	-	3	-	-	-
Claium oxide + Magnesium Oxide, CaO+MgO	18 - 25	-	-	-	-	-
Loss on ignition, L.O.I.	4 up to 12	3 - 9	3 - 9	2 - 5	2 - 5	3
Other	<3	trace	trace	trace	trace	trace
Thermal Conductivity, BTU•in./hr•ft^2•°F, ASTM C 201						
mean temperature @ 500°F	-	0.46 (8 pcf)	0.43 (8 pcf)	0.41	0.39	0.40
@ 572°F	0.49 (8 pcf)	-	-	-	-	-
@ 1000°F	-	0.94 (8 pcf)	0.87 (8 pcf)	0.68	0.65	0.72
@1292°F	1.39 (8 pcf)	-	-	-	-	-
@ 1500°F	-	1.58 (8 pcf)	1.49 (8 pcf)	1.15	1.02	1.12
@ 1832°F	2.64 (8 pcf)	-	-	-	-	-
@ 2000°F	-	2.29 (8 pcf)	2.18 (8 pcf)	1.82	1.51	1.58
@ 2012°F	3.12 (8 pcf)	-	-	-	-	-

Boards and Shapes Overview

Morgan Thermal Ceramics line of board and shape products cover an entire temperature and mechanical strength range. They feature excellent insulating performance, good high temperature strength and can be custom designed for a broad range of uses.

Manufactured by a vacuum formed process these products are marketed as Kaowool®, Alfibond®, and Superwool® brands. Organic and inorganic compositions are available and offer:

- low thermal conductivity
- excellent thermal shock resistance
- low heat storage
- a wide range of mechanical strengths
- dimensional stability up to 3000°F (1649°C)
- no off-gassing during initial heat up of inorganic products

Boards

- Wide range of standard thicknesses and sizes
- Can be machined for tighter tolerance

Shapes

- Custom designed for optimized high temperature performance, utilizing decades of application experience
- Can be one-time use product or integral part of design
- Offer superior insulating performance, excellent molten metal resistance, and high strength
- Superior, in-house, mold-making technology
- Expertise in embedding hardware into shapes for integrated mounting, support or process specific benefits

Burner Blocks and Peep Frames

- Engineered with light-weight, advanced vacuum forming technology
- Inorganic composition for high temperature strength retention
- Offer easy, low cost installation by embedding mounting hardware
- Provide minimal heat storage
- Resist thermal shock and spalling

Boards and Shapes - Superwool

MSDS Number	350	354	354	RP350	RP350	350	602
Technical Datasheet Number	1114-115	1114-115	1114-115	1114-115	1114-115	1114-115	1114-115
Product Name	Superwool®						
	607®	607 Minimox	607 PM	I-607	607 Alfibond	HT	HT PM
Color	white	white	beige	white	white	white	white
Density, pcf	20 - 22	14 - 16	15 - 17	15 - 17	23 - 27	20 - 22	14 - 17
Continuous Temperature Use Limit, °F	1832	1832	1832	1832	1832	2150	2150
Maximum Temperature Rating, °F	2012	2012	2012	2012	2012	2372	2372
Thickness, in., board form	½ - 3	½ - 3	⅛ - ¼	½ - 6	½ - 6	½ - 3	⅛ - ¼
Modulus of Rupture, psi	300	300	200 - 250	-	-	200 - 250	175 - 225
Compressive Strength, psi							
@ 5% deformation	55	55	15 - 25	-	-	60	-
@ 10% deformation	60	60	23 - 40	-	-	70	-
Permanent Linear Shrinkage, %							
24 hrs. @ 1500°F	2.0	2.0	-	-	-	0.25	0.25
@ 1800°F	2.5	2.5	1.0	-	-	0.25	0.33
Chemical Analysis, %, Weight Basis After Firing							
Alumina, Al_2O_3	trace	trace	trace	trace	50	70 - 80	70 - 80
Silica, SiO_2	67	69	67	70	29	-	-
Calcium oxide + Magnesium oxide, CaO + MgO	27	26	27	24	17	18 - 25	18 - 25
Other	1	1	1	<1	<1	<3	<3
Loss on ignition, L.O.I.	4 - 7	4 - 7	2 - 4	1.3	6 - 9	3 - 6	2 - 5
Organic material	3 - 6	<3	-	trace	trace	-	-
Thermal Conductivity, BTU•in./hr•ft²•°F, ASTM C 201							
mean temperature @ 500°F	0.39	0.39	0.40	0.43	0.60	0.40	0.39
@ 1000°F	0.65	0.65	0.62	0.66	0.86	0.62	0.66
@ 1500°F	1.04	1.04	0.99	1.01	1.23	1.04	1.05
@ 1800°F	1.35	1.35	-	-	-	-	1.33
@ 2000°F	-	-	-	-	1.77	1.51	1.55

Boards and Shapes - Organic

MSDS Number	203	203	203	275	203	211	211	260	260	260	260
Technical Datasheet Number	514-700	514-700	514-700	514-700	514-700	514-700	514-700	514-700	514-700	514-700	514-700
Product Name	Kaowool®										
	M	**PM**	**HP**	**HD**	**A**	**HS**	**HS-45**	**HT**	**2600**	**80**	**3000**
Color	beige	white	beige	beige	beige	beige	white	yellow	blue	white	pink
Density, pcf	16 - 18	16	20 - 23	26	28	28	42	22 - 25	15	25	12
Continuous Temperature Use Limit, °F	2000	2150	2100	2300	2100	2300	2400	2450	2600	2950	2950
Maximum Temperature Rating, °F	2200	2300	2300	2400	2300	2400	2500	2600	2700	3000	3000
Thickness, in., board form	½ - 3	⅛ - 3	½ - 3	½ - 3	½ - 3	½ - 3	½ - 3	½ - 3	½ - 3	½ - 3	½ - 3
Modulus of Rupture, psi	100 - 130	200 - 250	200	150 - 175	250	230 - 260	450 - 550	200	115	75	70
Compressive Strength, psi											
@ 5% deformation	20 - 30	20 - 30	75	50 - 70	100	60 - 80	200 - 250	75	30	25	20
@ 10% deformation	30 - 40	30 - 40	100	70 - 90	125	80 - 100	250 - 300	100	40	50	25
Permanent Linear Shrinkage, %											
24 hrs. @ 1500°F	1.2	0.2	0.7	0.1	-	0.8	0.5	-	0.3	-	0.3
@ 1800°F	2.2	2.0	1.6	1.4	1.6	1.9	0.7	-	0.3	-	0.1
@ 2000°F	2.8	2.4	2.8	2.5	2.8	2.1	0.4	-	0.6	-	0.0
@ 2200°F	3.4	3.4	3.8	2.8	3.8	0.2	0.6	2.3	0.7	1.3	0.4
@ 2400°F	-	-	-	-	-	+0.3	+0.8	2.6	0.8	1.8	0.5
@ 2600°F	-	-	-	-	-	+1.1	-	3.0	-	0.1	0.6
@ 2800°F	-	-	-	-	-	-	-	-	-	+0.3	+1.5
@ 2900°F	-	-	-	-	-	-	-	-	-	-	+2.5
Chemical Analysis, %, Weight Basis After Firing											
Alumina, Al_2O_3	42	44	41 - 43	41	43 - 45	18	55	50 - 52	51	70 - 72	66
Silica, SiO_2	56	56	56 - 59	53	54 - 57	81	35	47 - 49	49	25 - 28	34
Calcium oxide + Magnesium oxide, CaO + MgO	-	-	-	5	-	-	8	-	-	-	-
Other	-	<1	-	-	<1	-	2	-	<1	<1	-
Loss on ignition, L.O.I.	4 - 7	6 - 8	5 - 8	7 - 9	5 - 8	5 - 8	5 - 7	7 - 9	7 - 9	3 - 5	7 - 9
Organic material	-	3 - 6	-	4 - 7	-	4 - 7	4 - 7	-	6 - 8	-	6 - 8
Thermal Conductivity, BTU•in./hr•ft²•°F, ASTM C 201											
mean temperature @ 500°F	0.5	0.4	0.5	0.6	0.5	0.7	1.0	0.5	0.5	0.5	0.5
@ 1000°F	0.7	0.6	0.7	0.8	0.7	0.8	1.0	0.7	0.7	0.7	0.7
@ 1500°F	1.0	0.9	1.0	1.1	0.9	1.1	1.2	0.9	1.0	0.9	1.0
@ 2000°F	1.5	1.3	1.4	1.6	1.3	1.6	1.7	1.3	1.5	1.3	1.4

Boards and Shapes - Inorganic

MSDS Number	RP200	RP200	RP230	RP230	RP230
Technical Datasheet Number	514-701	514-701	514-701	514-701	514-701
Product Name	Inorganic				
	I - 2100	**I - 2300**	**I - 2600**	**I - 2800**	**I - A5**
Color	beige	off white	white	white	white
Density, pcf	17	17	16	16	16
Continuous Temperature Use Limit, °F	2100	2300	2600	2800	2950
Melting Point, °F	3200	3200	3200	3200	3200
Modulus of Rupture, psi	75	56	72	66	60
Compressive Strength, psi					
@ 5% deformation	9	7	19	10	10
@ 10% deformation	12	9	25	16	12
Permanent Linear Shrinkage, %					
24 hrs. @ 1500°F	0.8	0.3	-	-	0.1
@ 1800°F	2.0	1.9	0.3	0.1	0.1
@ 2000°F	3.2	2.7	0.8	0.8	0.3
@ 2200°F	-	3.4	1.2	0.9	0.2
@ 2400°F	-	-	1.6	1.2	0.5
@ 2600°F	-	-	1.6	1.5	0.5
@ 2800°F	-	-	-	1.0	0.6
Chemical Analysis, %, Weight Basis After Firing					
Alumina, Al_2O_3	30	32	35	40	45
Silica, SiO_2	68	68	65	60	55
Other	1.5	<1	<1	<1	<1
Loss on ignition, L.O.I.	1.3	1.3	1.3	1.3	1.3
Thermal Conductivity, BTU•in./hr•ft²•°F, ASTM C 201					
mean temp. @ 500°F	0.48	0.48	0.45	0.44	0.46
@ 1000°F	0.72	0.72	0.67	0.64	0.68
@ 1500°F	1.03	1.03	1.01	0.93	1.02
@ 2000°F	1.52	1.52	1.49	1.34	1.52
@ 2500°F	-	-	-	-	2.21

Boards and Shapes - Alfibond and Minimox

MSDS Number	RP211	RP211	RP230	RP230	237
Technical Datasheet Number	514-704	514-704	514-704	514-704	514-705
Product Name	**Alfibond**				**Minimox®**
	2100	**2300**	**2800**	**A5**	**1300**
Color	white	white	white	white	cream
Density, pcf	29	29	28	26	19
Continuous Temperature Use Limit, °F	1900	2300	2800	2900	2100
Maximum Temperature Rating, °F	-	-	-	-	2400
Melting Point, °F	3200	3200	3200	3200	3200
Modulus of Rupture, psi	250 - 300	275 - 325	275 - 325	250 - 280	90 - 110
Compressive Strength, psi					
@ 5% deformation	24	24	18	18	15 - 20
@ 10% deformation	32	32	24	24	20 - 25
Permanent Linear Shrinkage, %					
24 hrs. @ 1500°F	-	-	-	-	0.2
@ 1800°F	2.6	2.1	0.2	0.1	1.8
@ 2000°F	4.6	3.3	0.3	0.3	2.3
@ 2200°F	6.4	4.5	1.1	0.8	-
@ 2400°F	-	5.0	1.6	0.9	-
@ 2600°F	-	-	1.7	1.0	-
@ 2800°F	-	-	1.6	0.5	-
Chemical Analysis, %, Weight Basis After Firing					
Alumina, Al_2O_3	50	52	62	70	40
Silica, SiO_2	49	48	38	30	53
Calcium oxide + Magnesium oxide, CaO + MgO	-	-	-	-	3
Other	1	<1	<1	<1	<2.5
Loss on ignition, L.O.I.	6 - 9	6 - 9	6 - 9	6 - 9	3
Organic material	-	-	-	-	trace
Thermal Conductivity, BTU•in./hr•ft²•°F, ASTM C 201					
mean temp. @ 500°F	-	-	-	-	0.62
@ 1000°F	0.86	0.86	0.72	0.72	0.79
@ 1500°F	1.23	1.23	1.01	1.01	1.22
@ 2000°F	1.77	1.77	1.44	1.44	1.76

Boards and Shapes - Millboards

MSDS Number	226	226	251
Technical Datasheet Number	514-702	514-702	514-702
Product Name	**Kaowool® MB-822**	**Kaowool 1401**	**Kaowool MB-830**
Color	white	white	tan
Density, pcf	55	35 - 40	40
Continuous Temperature Use Limit, °F	2000	2000	2000
Maximum Temperature Rating, °F	2300	2300	2700 (one time)
Melting Point, °F	3200	3200	3200
Thickness, in.	1/8 - 1/4	1/16 - 1/2	0.16
Modulus of Rupture, psi	650 - 750	650 - 750	400 - 500
Compressive Strength, psi			
@ 5% deformation	50 - 75	10 - 20	-
@ 10% deformation	100 - 125	55 - 70	-
@ 15% deformation	250 - 300	175 - 200	-
Chemical Analysis, %, Weight Basis After Firing			
Alumina, Al_2O_3	35	36	35
Silica, SiO_2	63	60	65
Other	2	4	-
Loss of Ignition, L.O.I.	5 - 7	9 - 11	12 - 15
Organic material	4 - 6	8 - 10	11 - 14
Thermal Conductivity, BTU•in/hr•ft²•°F, ASTM C 201			
mean temperature @ 500°F	0.80	0.61	0.53
@ 1000°F	0.89	0.81	0.71
@ 1500°F	0.98	1.04	0.91
@ 2000°F	1.08	1.33	1.15

Mastics Overview

Morgan Thermal Ceramics has a full product offering of fiber based insulation materials available in pumpables, moldables, coatings and cements. Manufactured specifically to aid in efficient furnace, kiln and boiler operation, these products eliminate hot spots, provide superior maintenance solutions, and make insulation installation quick and easy.

Pumpables

Kaowool® Pumpable
- Standard fiber based pumpable mastic for hot or cold repairs up to 2000°F (1093°C)

Kaowool Pumpable XTP
- Lower viscosity pumpable mastic for hot or cold repairs up to 2000°F (1093°C)

Kaowool Pumpable HT
- High temperature pumpable mastic ideal for hot face refractory lining repairs up to 2500°F (1371°C)

Kaowool Pumpable HS
- Exceptionally strong and abrasion resistant pumpable refractory insulation for applications to 2800°F (1538°C)

Superwool® Pumpable
- Low biopersistent fiber based pumpable is non-wetting to molten aluminum

Therm-O-Hot® Patch
- Economical vermiculite mastic insulation product with service range up to 1900°F (1038°C)

Cease-Fire® 2000 Insulating Foam
- Two-component refractory foam insulation that free-flows to fill voids

Moldables

Kaowool Moldable
- General purpose fiber based mastic for patching

Kaowool Moldable AR
- Premium grade fiber based mastic ideally suited for aluminum troughs and launders

Superwool Moldable
- Low biopersistent fiber based mastic for general patching applications and is non-wetting to molten aluminum

Coatings

Kaowool Sealcoat™ HT
- Hot face coating to improve thermal efficiency, used as a furnace maintenance and emergency repair material that can be troweled, caulked, or spray applied

Superwool Sealcoat HT
- Hot face coating to improve thermal efficiency, used as a furnace maintenance and emergency repair material that can be troweled, caulked, or spray applied

Therm-O-Flake™ Coating
- Vermiculite based insulation applied by gunning and can reduce radiation loss and air filtration

Unikote™ Coatings
- Provide protective surface over Pyro-Bloc, Pryo-Fold, Kaowool, and Unifelt modules

Kaowool Rigidizer
- Penetrating liquid coating that increases surface hardness and resistance to erosion of ceramic fiber products

Cements

Kaowool Cement B and Cera-Kote® Cements
- Cements for joining fibrous products and available in a non-RCF/Non-Crystalline silica

Super STIC TITE™
- Mineral wool based non-hydraulic insulating cement

Kao-Seal®
- Water-based product for use as a spray or brush sealant, fiber dust suppressant or adhesive

Therm-O-Stix™ Adhesive
- Fast setting fibrous adhesive used to join fiber products together or to temporary hold fiber based products to metal surfaces

Mastics - Pumpables

MSDS Number	351	210	210	210	210	TR108	106
Technical Datasheet Number	514-1014	514-1011	514-1011	514-1011	514-1011	514-1060	514-1000
Product Name	**Superwool® Pumpable**	**Kaowool® Pumpable**	**Kaowool Pumpable XTP**	**Kaowool Pumpable HT**	**Kaowool Pumpable HS**	**Therm-O-Hot Patch™**	**Cease Fire® 2000**
Continuous Temperature Use Limit, °F	1900	1900	1900	2400	2800	1800	2000
Maximum Temperature Rating, °F	2000	2000	2000	2500	2800	1900	2000
Density, Dried, pcf dried	26	22 - 26	34 - 40	23 - 28	70	22.4	39 - 47
wet	75	70 - 75	70 - 75	73 - 78	100	60	-
Compressive Strength, psi							
5% @ 1800°F	68	45	-	-	-	-	-
@ 2000°F	-	-	75	-	280	-	-
10% @ 1800°F	142	68	-	-	-	-	-
Permanent Linear Change, %, ASTM C113							
@ 1000°F	-	-	-	-	-	-	-1.3
@ 1200°F	-0.3	-	-	-	-	-	-
@ 1500°F	-1.7	-	-1.0	-0.2	-	-1.5	-2.5
@ 1800°F	-1.7	-1.0	-	-	-	-	-
@ 2000°F	-2.0	-3.0	-2.5	-	-2.2	-	-
@ 2500°F	-	-	-	-2.4	+0.4	-	-
@ 2800°F	-	-	-	-	-1.1	-	-
Thermal Conductivity, BTU•in/hr•ft^2•°F, ASTM C417							
mean temperature @ 300°F	-	-	0.5	-	-	-	0.75
@ 400°F	-	-	-	-	-	0.76	-
@ 500°F	0.5	0.5	-	0.5	-	-	-
@ 700°F	-	-	0.7	-	-	-	0.96
@ 800°F	-	-	-	-	-	0.97	-
@ 1000°F	0.7	0.7	-	0.7	-	-	-
@ 1100°F	-	-	1.1	-	-	1.15	1.22
@ 1200°F	-	-	-	-	-	1.25	-
@ 1500°F	1.0	1.0	-	1.0	-	-	-
@ 1600°F	-	-	-	-	-	1.56	-
Chemical Analysis, %, weight basis after firing							
Alumina, Al_2O_3	5	39 - 43	34	43 - 47	47 - 50	19	34
Silica, SiO_2	64	52 - 58	66	50 - 54	47 - 50	46	34
Calcium oxide, CaO	25	-	-	-	-	1.7	12
Phosphorous oxide, P_2O_5	-	-	-	-	-	-	16
Magnesium oxide, MgO	4	-	-	-	-	17	-
Ferric oxide, Fe_2O_3	-	-	-	-	0.4 - 0.7	8.9	0.8
Other	-	3 - 5	-	2 - 4	2 - 4	4.4	2.2
Shelf Life, months, minimum	12	12	6	12	6	12	12
Quantity per Container, gallon	5 (pail)	5 (pail)	5 (pail)	5 (pail)	5 (pail)	5 (pail)	50 (bag, lb.)

Mastics - Moldables

MSDS Number	351	210	210
Technical Datasheet Number	514-1013	514-1010	514-1010
Product Name	**Superwool® Moldable**	**Kaowool® Moldable**	**Kaowool Moldable AR**
Continuous Temperature Use Limit, °F	2000	1900	1800
Maximum Temperature Rating, °F	2100	2000	1800
Density, pcf dried	56	28 - 30	55 - 60
wet	97	70 - 75	100 - 105
Compressive Strength, psi, fired			
5% @ 1800°F	-	-	300
10% @ 2000°F	250	-	-
Permanent Linear Change, %, ASTM C113			
@ 1000°F	-	-0.1	-2.3
@ 1500°F	-	-0.2	-2.3
@ 2000°F	-1.3	-2.7	-3.1
Thermal Conductivity, BTU•in/hr•ft^2•°F, ASTM C417			
mean temperature @ 500°F	0.7	0.5	0.7
@ 1000°F	1.0	0.7	1.0
@ 1500°F	1.3	1.0	1.3
Chemical Analysis, %, weight basis after firing			
Alumina, Al_2O_3	20	26 - 30	29 - 32
Silica, SiO_2	65	67 - 72	64 - 67
Calcium oxide, CaO	11	-	-
Magnesium oxide, MgO	2	-	-
Other	<3	1 - 2	3 - 5
Shelf Life, months, minimum	12	12	6
Quantity per Container, gallon	1, 5 (pail) 11, 32 (tube, oz.)	1, 5 (pail) 11, 32 (tube, oz.)	1, 5 (pail) 11, 32 (tube, oz.)

Mastics - Coatings

MSDS Number	364	210	205	154	207	207
Technical Datasheet Number	514-1015	514-1012	514-1006	514-1050	514-1020	514-1020
Product Name	**Superwool® Sealcoat™ HT**	**Kaowool® Sealcoat™ HT**	**Kaowool Rigidizer**	**Therm-O-Flake Coating**	**Unikote® M Coating**	**Unikote S Coating**
Continuous Temperature Use Limit, °F	2800	2500	-	1600	2500	2800
Maximum Temperature Rating, °F	2900	2600	2300	1800	2600	3000
Density, pcf						
dried	32 - 36	32 - 36	-	-	69	69
wet	75	78 - 82	75	-	-	-
Compressive Strength, psi, fired						
10% @ 2000°F	225	-	-	-	-	-
Permanent Linear Change, %, ASTM C113						
@ 2000°F	-1.4	-1.8	-	-	-0.3 (2375°F)	-0.3 (2375°F)
@ 2400°F	-1.4	-	-	-	-0.5 (2550°F)	-
@ 2600°F	-1.5	-2.9	-	-	-	-0.5 (2650°F)
@ 2800°F	-1.6	-	-	-	-	-
Thermal Conductivity, BTU•in/hr•ft^2•°F, ASTM C417						
mean temperature @ 500°F	0.8	0.6	-	0.88 (400°F)	-	-
@ 1000°F	1.0	0.8	-	1.09 (800°F)	-	-
@ 1500°F	1.4	1.1	-	1.31 (1200°F)	-	-
@ 2000°F	2.0	1.5	-	1.56 (1600°F)	-	-
Chemical Analysis, %, weight basis after firing						
Alumina, Al_2O_3	-	45 - 48	-	19	71	76
Silica, SiO_2	86	51 - 54	-	50	24	24
Calcium oxide, CaO	12	-	-	3	-	-
Magnesium oxide, MgO	-	-	-	15	-	-
Other	2	1 - 2	-	13	5	-
Shelf Life, months, minimum	12	12	12	12	12	12
Quantity per Container, gallon	1, 5 (pail) 11, 32 (tube, oz.)	1, 5 (pail) 11, 32 (tube, oz.)	1, 5 (pail)	40 (lb, bag)	5 (pail, 50 lb.)	5 (pail, 50 lb.)

Mastics - Cements

MSDS Number	230	230	230	142	130	302	TR104
Technical Datasheet Number	514-1005	514-1005	514-1005	514-1005	514-1065	514-1040	514-1055
Product Name	**Kaowool Cement B**	**Cera-Kote**	**Cera-Kote 322-D**	**Cera-Kote 624-A**	**Super Stic-Tite™**	**Kao-Seal®**	**Therm-O-Stix® Adhesive**
Continuous Temperature Use Limit, °F	2200	2150	2200	2200	-	-	1200
Maximum Temperature Rating, °F	2400	2300	2400	2400	1900	200	1200
Melting Point, °F	3250	3200	3250	3250	-	-	-
Color	white	off-white	white	white	-	-	-
Density, pcf, dried	-	-	-	-	27	-	15
Bonding Stregnth, psi (MPa)	205	180	255	-	-	-	-
Chemical Analysis, %, weight basis after firing							
Alumina, Al_2O_3	44	39	44	80	-	-	-
Silica, SiO_2	55	59	55	19	-	-	74
Other	2	2	2	1	-	-	26
Shelf Life, months, minimum	6	6	6	6	-	-	12
Quantity per Container, gallon	1, 5 (pail)	1, 5 (pail)	1, 5 (pail)	1, 5 (pail) 16 oz. (bottle)	50 lb. bag	5, 55 (pail)	5 (pail)

Mastic Installation Equipment

Product Description
HS-100 Extrusion Pump is a modified piston extrusion pump designed to pump Kaowool® or Superwool® Pumpable and Sealcoat products in a fast efficient manner. The air-operated HS-100 Extrusion Pump is mounted on a platform with wheels for easy movement. Five gallon pails of the Kaowool or Superwool Pumpable materials are positioned in the pump and the extrusion action delivers the product through the supply hose to the application area.

The Sealcoat® Nozzle assembly is designed to work in conjunction with the HS-100 Extrusion Pump to effectively apply the Sealcoat products. The special nozzle atomizes the Sealcoat material, providing an efficient wet gunning process for delivering the material onto a variety of insulation, refractory, or metal surfaces.

The AO-25 Caulking Gun is an air-operated bulk loaded caulking gun for use with Kaowool or Superwool Pumpable, Moldable and Sealcoat products. It is capable of delivering products at a rate of ½ to 1½ gallons per minute depending on air pressure and nozzle size. The gun operates on air pressure of 30 - 90 psi (0.21 - 0.62 MPa)

The CW-1 Caulking Wand attaches to the end of the HS-100 Pump delivery hose for large volume repairs. This is an ideal set-up to apply Pumpable and Sealcoat products to fill gaps in refractory linings and eliminate Hot Spots. Openings in fiber module linings due to shrinkage are readily and effectively filled.

Features
HS-100 Extrusion Pump/Sealcoat Nozzle
- Easy to operate
- Quick set-up/clean-up
- Operates on compressed air systems (100 psi, 80 cfm ideal)

AO-25 Caulking Gun
- Easy to operate
- Manually loaded from 5 gallon pails

CW-1 Caulking Wand
- Easily attaches to the delivery hose
- ½ - inch nozzle diameter

HS-100 Extrusion Pump (top)
CW-1 Caulking Wand (L) and Sealcoat Nozzle (R)

AO-25 Caulking Gun

Textile Overview

Morgan Thermal Ceramics Kao-Tex® textiles are available in a complete line of cloth, tape, tubing, rope, thread and cordage and can withstand temperatures from 1000°F to 2500°F (538°C to 1370°C).

Low thermal conductivity, high tensile strength, and excellent abrasion resistance are among the outstanding characteristics of Kao-Tex products.

- Offered with specialized coatings
- Provide excellent thermal protection
- Asbestos free
- Heat resistant
- Chemically resistant to most elements

Fabrication with other Morgan Thermal Ceramics products enables custom engineered thermal solutions to be developed to customer specifications.

Kao-Tex 1000
- Available in cloth, woven tapes, tubing, twisted and braided rope
- Maximum temperature rating 1000°F (538°C)
- Continuous use limit up to 900°F (482°C)
- Excellent tensile strength

Kao-Tex 1800
- Available in flexible, high silica fabric
- Maximum temperature rating 1800°F (982°C)
- Continuous use limit up to 1700°F (927°C)
- Organic free

Kao-Tex 1900
- Processed silica fibers for use up to 1900°F (1038°C)
- Standard grade coated with hydrocarbon with improved handling and abrasion properties
- Pre-Shrunk grades available with or without coatings
- Application of silicone, neoprene, aluminization is available

Kao-Tex 2000
- Available in cloth, tape, and rope
- Maximum temperature 2000°F (1093°C)
- Continuous use limit up to 2000°F (1093°C)
- Excellent thermal shock and corrosive attack resistance

Kao-Tex Styles 2200 and 2500
- Available in fabric, tape, sleeving, yarn, cordage and thread
- Maximum temperature up to 2200°F and 2500°F (1204°C and 1371°C) respectively
- Continuous use limit up to 2200°F and 2500°F (1204°C and 1371°C) respectively
- Fire and flame resistant with low thermal conductivity

Textiles

MSDS Number	208	219	220	214	221	221
Technical Datasheet Number	514-905	514-935	514-935	514-945	514-955	514-955
Product Name	**Kao-Tex® 1000**	**Kao-Tex 1800**	**Kao-Tex 1900**	**Kao-Tex 2000**	**Kao-Tex 2200**	**Kao-Tex 2500**
Color	white	tan	tan	white	white	coral/white
Fiber Type	fiberglass	leached silica	leached silica	ceramic fiber	alumina silica boria	alumina silica boria
Thickness, in.	0.020 - 0.120	0.030, 0.045, 0.054	0.030, 0.045, 0.050	0.125	0.012 - 0.052	0.020 - 0.030
Continuous Temperature Use Limit, °F	1000	1700	1900	1800	2200	2500
Maximum Temperature Rating, °F	1000	1800	2000	2000	2200	2500
Melting Point, °F	3000	3000	3000	3200	3272	3272
Chemical Analysis, %, Weight Basis After Firing						
Alumina, Al_2O_3	10 - 12	0.1	-	47	62	70
Silica, SiO_2	52 - 60	98	97.85	53	24	28
Boron oxide, B_2O_3	8 - 13	trace	0.16	trace	14	2
Calcium oxide, CaO	16 - 25	trace	0.23	trace	trace	trace
Magnesium oxide, MgO	0 - 6	trace	0.17	trace	trace	trace
Other	-	1 - 3	1.5	trace	-	-

Data presented in table above references cloth product forms only. Please our website to view the product datasheets for rope, thread, tubing and sleeving data points.

Fire Protection Overview

FireMaster® products are used all over the world to protect people and structures against fire. The wide variety of FireMaster Fire Protection Systems are comprehensively certified and extensively tested to meet national and international standards, offering our customers the security of global proven fire performance in various market sectors:

- Commercial Buildings, Hotels, Sports Stadiums and Airport Terminals
- Industrial Plants
- Petrochemical plants
- Offshore Platforms and FPSO's
- Cruise Ships, Military Vessels, Mega Yachts and Fast Ferries
- Tunnels and underground construction

Systems are tested to many international standards and have approvals valid worldwide for cellulosic, hydrocarbon and jet fire protection.

FireMaster products offer fire, thermal and acoustical fire protection in a single product, and due to the lightweight flexible nature of the material, labor is significantly reduced during installation.

Morgan Thermal Ceramics FireMaster products and engineered systems are:

- Used globally to protect people and structures against fire
- Comprehensively fire tested and approved to national and international standards

The FireMaster product range encompasses:

- Lightweight insulating fiber products supplied in a variety of product forms
- Spray applied cementitious products
- Engineered systems incorporating FireMaster products and other components

These fiber based products are manufactured using a patented composition.

- Low biopersistence superwool fiber exonerated under EU regulations for the classification of carcinogenic materials with temperature resistance of 2192°F (1200°C)

Blanket is flexible and strong without using binders; zero smoke or flame contribution, non-combustible and lightweight.
Boards are rigid and strong panels than can be cut with minimal dust generation.
Paper is ultra thin and light fire insulation.
Felts are resilient products available in low and high densities or specially formulated to expand up to 7 times original thickness when exposed to heat.
Bulks are loose fiber insulation perfect for packing penetration seals.
Cements are high-density products developed for applications requiring high strength or high quality surface finishes.

Fire Protection - FireMaster®

MSDS Number	350	350	350	203	401	401
Technical Datasheet Number	714-300	714-100	714-101	714-105	714-115	714-115
Product Name	FireMaster					
	Marine Plus Blanket	607 Blanket	607 Bulk	Board	Firecrete® 85	Firecrete 125
Color	white	white	white	beige	-	-
Density, pcf	4, 6, 8	6, 8	-	16	84	124
Thickness, in.	½ - 2	½ - 2	-	½ - 2	-	-
Width, ft.	2 - 4	-	-	-	-	-
Maximum fire exposure, 2 hours, °F	2192	2192	2192	2192	2500	2600
Melting Point, °F	2680	2680	2680	3200	2700	3100
Facing options, thickness, mil						
aluminum foil facing	2, 4	2, 4	-	-	-	-
stainless steel foil facing	2	2	-	-	-	-
Surface Burn Characteristics, ASTM E84						
flame spread	0	0	0	0	0	0
smoke developed	0	0	0	0	0	0
fuel contribution	0	0	0	0	0	0
Chemical Analysis, %, Weight Basis After Firing						
Alumina, Al_2O_3	trace	trace	trace	42	42	47
Silica, SiO_2	60 - 70	60 - 70	60 - 70	56	37	40
Calcium oxide, CaO	25 - 35	25 - 35	25 - 35	-	16.2	8.5
Magnesium oxide, MgO	4 - 7	4 - 7	4 - 7	-	-	0.2
Other	-	-	-	2	4.8	3.3
Thermal Conductivity, BTU•in/hr•ft²•°F						
mean temperature @ 500°F	0.39	0.39	-	0.46	2.8	5.9
@ 1000°F	0.73	0.73	-	0.72	3.0	6.2
@ 1500°F	1.28	1.28	-	1.04	3.2	6.5
@ 1800°F	1.71	1.71	-	-	3.4	6.6
@ 2000°F	-	-	-	1.42	3.5	6.7

MSDS Number	350	350
Technical Datasheet Number	714-236	714-233
Product Name	FastWrap® XL	PlenumWrap®+
Color	white	white
Density, pcf	6	8
Thickness, in.	1½	½
Width, ft.	2, 4	2, 4
Aluminum foil encapsulation	yes	yes
Maximum fire exposure, 2 hours,°F	2192	2192
Melting Point, °F	2680	2680
Surface Burn Characteristics, encapsulated product, ASTM E84		
flame spread	<25	<50
smoke developed	<50	<50

Microporous Overview

Morgan Thermal Ceramics BTU-BLOCK™ line of industrial microporous products is the most thermally efficient insulation available. BTU-BLOCK is ideal for high temperature industrial and OEM environments.

- Reduce energy waste
- Reduct temperature variability
- Reduce insulation thickness
- Reduce cold face temperatures

Features of BTU-BLOCK insulation

- Exceptionally low thermal conductivity
- Low weight with high compressive strength
- Low shrinkage at high temperatures
- Temperature use limit of 1800°F (982°C)
- Vibration resistance

BTU-BLOCK Board

- High compressive strengths relative to standard backup insulation
- Offers exceptional performance where machinability is required for on-site fabrication

BTU-BLOCK Laminated Board

- Easily configured to shape on site with standard cutting tools
- Low dust
- High temperature cloth laminated on top and bottom surfaces with an inorganic adhesive

BTU-BLOCK Panel

- Encapsulated with glass cloth
  - Maximizes the flexural strength of the rigid panel
  - Very low density product
- Exceptional performance in compression situations

BTU-BLOCK Ladle Liner

- Large sheet size for easy installation
- Parallel-stitched pattern offers flexibility for easy installation
- Hydrophobic grades for cast in-place applications

BTU-BLOCK Flexible

- Easily wrapped or bent to conform to unique geometric shapes
- Textile encapsulations available for applications up to 1800°F (982°C)
- Excellent vibration resistance
- Pre-cut kits available for more efficient installation

Microporous

MSDS Number	MK203	MK203	MK203	MK203	MK203
Technical Datasheet Number	614-100	614-101	614-105	614-110	614-115
Product Name	**BTU-BLOCK™ Board**	**BTU-BLOCK Laminated Board**	**BTU-BLOCK Panel**	**BTU-BLOCK Flexible**	**BTU-BLOCK Ladle Liner**
Density, pcf	18, 20, 22, 25	18, 20, 22, 25	16	14, 16	14, 16
Thickness, in.	½ - 2	½ - 2	½ - 2	⅛ - ½	⅛ - ½
Core Continuous Temperature Use Limit, °F	1800	1800	1800	1800	1800
Compressive Resistance, psi, ASTM C 165, measured at 18 pcf					
@ 10% deformation	156	156	110 (16 pcf)	55 (16 pcf)	55 (16 pcf)
@ 20% deformation	268	268	182 (16 pcf)	105 (16 pcf)	105 (16 pcf)
@ 30% deformation	413	413	279 (16 pcf)	155 (16 pcf)	155 (16 pcf)
@ 40% deformation	670	670	460 (16 pcf)	205 (16 pcf)	205 (16 pcf)
Fired Linear Shrinkage, %, ASTM C 356					
24 hrs. @ 1000°F	0.3	0.3	0.3	0.3	0.3
@ 1500°F	0.6	0.6	0.6	0.6	0.6
@ 1750°F	1.3	1.3	1.3	1.3	1.3
Thermal Conductivity, BTU•in./hr•ft²•°F, ASTM C 201					
mean temperature @ 500°F	0.16	0.16	0.18	0.24	0.22
@ 1000°F	0.21	0.21	0.23	0.34	0.28
@ 1500°F	0.30	0.30	0.31	0.53	0.38
@ 1800°F	-	-	-	0.61	0.45

Block Insulation Overview

Our TR®-19 and TR-20 block insulation products offer economical and efficient solutions to your insulation needs. These products feature significantly improved temperature and weight characteristics when compared with traditional products. TR-19 and TR-19 HS are vermiculite based products and TR-20 is a diatomaceous silica product. These materials offer excellent energy saving efficiencies, good strength and minimal shrinkage.

TR-19 Block and TR-19HS Block

- Manufactured from vermiculite granules and high temperaturebonding materials
- TR-19 features lower thermal conductivity than competitive vermiculite boards
- TR-19HS offers high compression strength
- Operates in temperatures up to 1900°F (1038°C)
- Exhibits good strength and minimal shrinkage up to uselimit temperature
- Provides excellent resistance to aluminum cryolite attack

TR-20 Block

- Very good resistance to breakage
- Long, maintenance-free service and maximum operating efficiency
- Low conductivity and high stability
- Superior high-temperature block insulation
- Made from diatomaceous silica with a hydraulic binder
- Suitable for use up to 2000°F (1093°C)

TR-2000-SL Block

- Minimal shrinkage at top temperature limits
- Will not decompose at their maximum service temperature
- Calcium silicate composition
- Very low thermal conductivity
- Lightweight
- Good high temperature strength

TR block products are traditionally found in many Aluminium applications such as Carbon Bake Ovens, PotCells, Melting and Holding Furnaces.

- TR block insulation products can be used as both general insulation or back-up insulation in roofs, walls and floors
- General back-up insulation use with Morgan Thermal Ceramics' monolithics, firebricks, refractory plastics, and ceramic fiber products

Block

MSDS Number	TR503	TR503	250	TR500
Technical Datasheet Number	1014-100	1014-100	1014-100	1014-112
Product Name	**TR®-19**	**TR-19 HS**	**TR-20**	**TR-2000 SL**
Color	beige	beige	off - white	white
Density, pcf, fired at use limit	24.5	36	29	17.5
Continuous Temperature Use Limit, °F	1900	1900	2000	1922
Maximum Temperature Rating, °F	1900	1900	2000	2000
Thickness, in.	1 - 7	1 - 4	1 - 7	1 - 4
Modulus of Rupture, psi, dried	110	160	135	155
fired 24 hours @ 1500°F	100	-	145	-
Cold Crushing Strength, psi				
dried	145	240	180	-
fired 24 hours @ use limit	95	-	150	215
Linear Shrinkage, %				
5 hrs. @ 1500°F	1.5	0.8	1.4	-
5 hrs. @ 1900°F	2.2	1.3	2.4	1.1
5 hrs. @ 2000°F	-	-	4.0	-
Chemical Analysis, %, Weight Basis After Firing				
Alumina, Al_2O_3	12	12	4.2	-
Silica, SiO_2	39	39	80	49
Calcium oxide, CaO	23	23	11	46
Magnesium oxide, MgO	12	12	0.8	-
Ferric Oxide, Fe_2O_3	7.5	7.5	1.6	-
Other	6.5	6.5	2.5	5
Loss on ignition, L.O.I.	10	10	9.5	10.5
Thermal Conductivity, BTU•in./hr•ft²•°F, ASTM C 201				
mean temperature @ 500°F	0.78	1.10	0.68	0.55
@ 1000°F	0.88	1.16	0.79	0.72
@ 1500°F	1.00	1.20	0.96	0.96
@ 2000°F	-	-	1.16	1.12 (1800°F)

Insulating Firebricks, Firebricks and Mortar Overview

Morgan Thermal Ceramics Insulating Firebrick (IFB) offers unsurpassed performance in a wide variety of markets. Ten grades are manufactured to ISO 9002 certified standards, and operate in temperatures up to 3250°F (1787°C). Morgan Thermal Ceramics IFB can be specially engineered to meet special shape requirements.

In addition, a line of high alumina (90+%) dense firebrick, SR® is engineered to handle very difficult applications. These high purity bricks have excellent load-bearing strength at temperatures above 3000°F (1649°C), and provide good thermal shock resistance.

To compliment the Insulating and Dense Firebrick, a complete line of mortars are available in wet and dry grades. These mortars combine ease of use and high temperature performance.

Low-Temperature IFB Grades
- K®-23, TC™-23, IFB 23 Tile and K-25
- Extremely low thermal conductivity
- Low densities and heat storage
- Good strength at room and high temperatures
- Excellent resistance to alkali attack

High-Temperature IFB Grades
- K-26, TC-26, JM-28 and JM™-30
- Excellent strength and thermal stability
- Low heat storage
- High purity
- Good thermal conductivity

Firebrick
- SR-90, SR-99, SR-99 LS and Insalcor® available grades
- 90 and 99% alumina firebrick
- Excellent low SiO_2 contents for use in Hydrogen atmospheres
- Excellent high temperature stability

Mortars
- High-Temp™, Smoothset®, Air-Set®, K-Bond®, Mul-Set™ F, Coastal 90®
- Matched for use with each Morgan Thermal Ceramics firebrick and IFB
- Both heat setting and air setting grades are available
- Temperature use limits range from 2850°F to 3200°F (1566°C to 1760°C)

IFB - Low and High Temp

MSDS Number	151-1	151-1	151-1	151-1	151-1	151-2	151-2	151-2
Technical Datasheet Number	114-3	114-3	114-3	114-3	114-2	114-2	114-2	114-2
Product Name	**K®-23**	**TC™-23**	**IFB 23 Tile**	**K-25**	**K-26**	**TC-26**	**JM-28**	**JM-30**
Recommended Hot Face Temperature Use Limit, °F	2300	2300	2300	2500	2600	2600	2800	3000
Melting Point, °F	2750	2750	2750	2800	3000	3000	3190	3190
Density, ASTM C 134 lb/9" straight	1.93	1.8 - 2.0	2.2	2.3	2.3	2.8	3.2	3.8
pcf	31-35	30 - 36	37	38 - 41	38-41	48	55	65
Modulus of Rupture, psi, ASTM C 133	115	105 - 115	105	135	135	200	220	250
Cold Crushing Strength, psi, ASTM C 133	145	120 - 140	125	200	200	270	340	440
Permanent Linear Change, %, ASTM C 210								
fired @ 2250°F	0 to -0.1	-0.2	0 to -0.1	-	-	-	-	-
@ 2450°F	-	-	-	-0.3	-	-	-	-
@ 2550°F	-	-	-	-	-0.3	-0.1	-	-
@ 2750°F	-	-	-	-	-	-	-0.5	-
@ 2950°F	-	-	-	-	-	-	-	-0.7
Deformation Under Hot Load, %, @ 10 psi, ASTM C 16								
1½ hrs. @ 2000°F	0	-0.1	0	0	-	-	-	-
@ 2200°F	0.3	-	-	0.1	0.2	0.2	0.1	-
@ 2400°F	-	-	-	-	-	-	-	0.3
Chemical Analysis, %, Weight Basis After Firing								
Alumina, Al_2O_3	38	38	38.5	46	48	47	67	70
Silica, SiO_2	45	45	47.5	37.5	37.5	49	31	28
Ferric oxide, Fe_2O_3	0.3	0.3	0.4	0.3	0.3	0.7	0.5	0.3
Titanium oxide, TiO_2	1.6	1.6	1.6	1.4	1.2	0.6	0.6	1.2
Calcium oxide, CaO	15	15	11	14	13	0.4	0.3	0.2
Magnesium oxide, MgO	0.1	0.1	0.2	0.1	0.1	0.1	0.1	0.1
Alkalies, as Na_2O	0.5	0.5	0.3	0.4	0.3	2.0	1.0	0.2
Coefficient of Reversible Thermal Expansion, in./in.•°F•10^{-6}	3	3	-	3.1	2.7	-	-	-
Thermal Conductivity, BTU•in./hr•ft²•°F (ASTM C 182)								
mean temperature @ 500°F	0.92	0.95	1.0	1.06	1.12	1.6	2.3	2.8
@ 1000°F	1.14	1.2	1.3	1.22	1.28	1.9	2.4	2.9
@ 1500°F	1.39	1.5	1.6	1.38	1.46	2.2	2.5	3.1
@ 2000°F	1.64	1.7	1.8	1.54	1.65	2.6	2.6	3.3
@ 2500°F	-	-	-	-	1.88	2.7	2.7	3.5
Brick Identifier, printed name on end of brick	23	23	23	25	26	26	28	30

Firebrick

MSDS Number	151-3	151-3	151-3	151-3
Technical Datasheet Number	114-1	114-1	114-1	114-4
Product Name	**SR-90®**	**SR-99**	**SR-99 LS**	**Insalcor®**
Continuous Use Limit, Recommended, °F	3100	3200	3200	3300
Melting Point, °F	3480	3660	3660	3600
Density, ASTM C134, lbs/9" straight	10.6	11.3	-	4.45 - 4.57
pcf	177-183	193	193	76 - 78
Modulus of Rupture, psi, ASTM C 133				
@ room temperature	3600	3800	4200	300
@ 2000°F	4500	2900	-	-
@ 2300°F	4200	1600	2000	-
@ 2600°F	2900	800	800	-
@ 2800°F	2100	650	-	-
Cold Crushing Strength, psi, ASTM C 133	9000	8000	9000	900
Permanent Linear Change, %, After 24 hrs, ASTM C 210				
5 hrs @ 3200°F	1.5	-	-	-
24 hrs @ 3200°F	-	0.3	-	-
72 hrs @ 3200°F	-	-	-0.6	-
Deformation Under Hot Load, %, @ 25 psi, ASTM C 16				
1½ hrs @ 2640°F	0	-0.3	-	0.1
1½ hrs @ 2800°F	0.1	-0.3	-	-
1½ hrs @ 3000°F	0.1	-	-	-
1½ hrs @ 3200°F	0.1	-	-	-
150 hrs @ 3200°F	<0.25	-	-	-
Permeability, $ft^3/hr \cdot ft^2 \cdot in/psi$	35	30	-	-
Abrasion Loss, cm^3, ASTM C 704	7.3	13.5	-	-
Porosity, %, ASTM C 20	18	17	20	-
Panel Spall Loss, %, 12 cycles, ASTM C 122, @ 3100°F	negligible	2.6	-	-
Coefficient of Reversible Thermal Expansion, $in./in. \cdot °F \cdot 10^{-6}$	-	-	-	3.8
Chemical Analysis, %, Weight Basis After Firing				
Alumina, Al_2O_3	88	99.4	99.5	77
Silica, SiO_2	12	0.4	0.1	21
Ferric oxide, Fe_2O_3	0.2	0.1	trace	0.4
Titanium oxide, TiO_2	trace	trace	trace	0.6
Calcium oxide, CaO	0.1	trace	0.2	0.1
Magnesium oxide, MgO	trace	trace	trace	0.1
Alkalies as Na_2O	0.1	0.1	0.2	0.3
Thermal Conductivity, $BTU \cdot in/hr \cdot ft^2 \cdot °F$				
mean temperature @ 500°F	24.6	38.9	38.9	5.5
@ 1000°F	21.5	30.7	30.7	5.6
@ 1500°F	19.4	25.5	25.5	6.3
@ 2000°F	17.7	21.6	21.6	7.6
@ 2500°F	16.5	19.1	19.1	9.2

Mortars

MSDS Number	141	141		141		141		141		158	158
Technical Datasheet Number	314-805	314-805		314-805		314-805		314-805		314-805	314-805
Product Name	**High-Temp™**	**Smoothset™**		**Air-Set™**		**K-Bond®**		**Mul-Set® F**		**Coastal® 90**	**Coastal 90 AS**
	heat setting	wet, air setting	dry, air setting	wet, air setting	dry, air setting	wet, air setting	dry, air setting	wet, air setting	dry, air setting	wet, air setting	dry, air setting
Max. Service Temperature, °F	3000	2850	2900	3000	3000	3000	3000	3200	3200	3250	3300
Type of Brick	IFB	IFB	IFB	IFB	IFB	IFB	IFB	IFB/ Insalcor	IFB/ Insalcor	Firebrick	Firebrick
Quantities required, lbs./1000 brick[1]	220 - 250	220 - 270	160 - 180	360 - 400	275 - 300	300 - 360	220 - 280	300 - 350	180 - 300	200 - 300	450 - 550
Lbs required to Brush Coat 100 sq.ft.	26	22	20	22	20	22	20	22	20	-	-
Average Recommended Water, %											
Trowel	26	-	29	-	31	-	20	-	22	-	-
Dip	44	-	50	-	52	-	37	-	33	-	-
Pounds per Bag	50	55 (drum)	50	55 (drum)	50	55 (drum)	50	55 (drum)	50	-	-
Chemical Analysis, %, Weight Basis After Firing											
Alumina, Al_2O_3	45	36	38	41	40	47	47	66	66	86.89	88.96
Silica, SiO_2	50	57	58	53	53	47	48	28	24	7.08	8.39
Ferric oxide, Fe_2O_3	1.0	0.9	1.0	1.4	1.4	0.9	0.9	1.2	1.2	0.32	0.14
Titanium oxide, TiO_2	2.2	1.7	1.9	2	1.9	0.7	1.1	2.2	2.2	0.26	0.05
Calcium oxide, CaO	0.2	0.2	0.2	0.2	0.2	0.1	0.5	0.1	0.1	0.02	0.02
Magnesium oxide, MgO	0.1	0.1	0.1	0.1	0.1	0.1	0.4	0.1	0.1	0.11	0.04
Alkalies as Na_2O	0.6	4	2.8	2.1	3.7	4.3	2.1	2.2	3.2	0.48	2.35
Boron oxide, B_2O_3	0.7	-	-	-	-	-	-	-	-	-	-

1 Amount of mortar used for laying either insulating firebrick or firebrick varies according to masonry practice. A range of quantities is shown for each respective type of brick listed above.

Monolithics Overview

Morgan Thermal Ceramics Tri-Mor® family of monolithic products provides a wide range of innovative solutions for heat-intensive challenges. Available in different formulations, densities, and installation methods, monolithics can be used as primary or secondary insulation, for repair, or for specialty applications. Grades may be selected depending on the structure to be lined. A lining may be installed using a single material or can be a complex selection depending on the environment/operation of the lined structure.

Specific grades have been developed for high temperature insulation, metal contact, slag resistance, abrasion resistance or thermal shock resistance. Morgan Thermal Ceramics offer an extensive range of alumino-silicate and silicon carbide based monolithic grades.

The classificationis as follows:

- **Insulating** - Tri-Mor Kaolite® grades are used for the containment of heat within high temperature operating structures.They can be used for either hot face working linings or as backing linings behind higher density working linings.

- **Dense** – Tri-Mor Kaocrete® grades are bonded by high alumina cements. These grades are easily placed by casting or gunning and offer good performance in most general applications.

- **Low Cement** – Tri-Mor Morflo® and Higun® grades are formulated with low cement. They also incorporate fine fillers and dispersants which significantly reduce water demand and enhance physical properties. Several versions of these grades can be placed with little or no vibration.

- **Clay Bonded** – Tri-Mor Plastics, Plascast® and Plasgun® can be supplied, for cast or gunned. Clay bonded grades have excellent thermal shock resistance.

- **Aluminum Resistance** - Tri-Mor Alcast® and Albond®, have been specifically developed with enhanced resistance to corundum growth which can occur when molten aluminium is in contact with refractory materials.

- **Special Duty** – Tri-Mor Kao-Tuff® has been specifically developed for particular applications where abrasion resistance is essential. Kao-Tuff 110 has both cast and gun versions with excellent strength and insulating properties. Kao-Tuff FS also features very good thermal shock resistance.

Monolithics - Insulating - Light Weight

MSDS Number	154	154	154	154	154	103	154	103	154
Technical Datasheet Number	314-100	314-100	314-100	314-100	314-101	314-101	314-101	314-101	314-101
Product Name	**Kaolite® 1600**		**Kaolite 1800**		**Kaolite 1:2:4**	**Kaolite 2000-HS**	**Kaolite 2000-HS Gun**	**Kaolite 2200**	**Kaolite 2200 Gun**
Method of Installation[1]	cast	gun	cast	gun	cast/gun	cast	gun	cast	gun
Average lbs. Req. to Place One Cubic Ft.[2]	26	36	26	35	55	59	62	59	62
Recommended Water, %[3]									
casting by vibrating	120 - 145	-	145 - 165	-	55 - 65	44 - 54	-	44 - 54	-
pouring	150 - 180	-	175 - 190	-	-	-	-	-	-
Recommended Temperature Use Limit, °F	1600	1600	1800	1800	2000	2000	2000	2200	2200
Density, pcf									
fired @ 1500°F	23 - 31	31 - 39	23 - 31	29 - 38	50 - 60	55 - 65	57 - 67	55 - 65	57 - 67
fired @ temperature use limit	23 - 31	31 - 39	23 - 31	29 - 38	50 - 60	57 - 67	58 - 68	57 - 67	58 - 68
Modulus of Rupture, psi, ASTM C 133									
dried 18-24 hrs. @ 220°F	45 - 75	70 - 120	30 - 50	50 - 80	125 - 200	90 - 150	85 - 150	90 - 150	90 - 150
fired 5 hrs. @ 1500°F	25 - 40	35 - 55	30 - 50	40 - 60	80 - 150	90 - 175	110 - 225	90 - 175	110 - 225
Cold Crushing Strength, psi, ASTM C 133									
dried 18 - 24 hrs @ 220°F	80 - 120	125 - 175	35 - 50	70 - 120	250 - 450	350 - 650	300 - 500	350 - 650	300 - 500
fired 5 hrs. @ 1500°F	50 - 70	90 - 120	50 - 80	80 - 110	200 - 450	350 - 800	350 - 900	350 - 800	350 - 900
fired 5 hrs. @ temperature use limit	50 - 70	90 - 120	40 - 60	60 - 80	200 - 450	450 - 900	450 - 900	450 - 900	450 - 900
Permanent Linear Change, %, ASTM C 113[4]									
dried 18 - 24 hrs. @ 220°F	-	-	-	-		0 to -0.2	0 to -0.2	0 to -0.2	0 to -0.2
fired 5 hrs. @ 1500°F	-1.0 to -2.0	-1.0 to -2.0	-0.5 to -1.5	-0.5 to -1.5	-0.4 to -1.0	-0.2 to -0.6	-0.2 to -0.65	-0.2 to -0.6	-0.2 to -0.65
fired 5 hrs. @ temperature use limit	-1.5 to -2.5	-1.5 to -2.5	-1.5 to -2.5	-1.5 to -2.5	-	-0.3 to -1.0	-0.3 to -0.8	-0.3 to -1.0	-0.3 to -0.8
Chemical Analysis, %, Weight Basis After Firing[5]									
Alumina, Al_2O_3	11	11	29	29	27	38	37	38	37
Silica, SiO_2	33	33	32	32	37	37	40	37	40
Ferric oxide, Fe_2O_3	7.9	7.9	9.8	9.8	10.6	2.4	2.1	2.4	2.1
Titanium oxide, TiO_2	1.4	1.4	2.3	2.3	1.4	1.0	1.2	1.0	1.2
Calcium oxide, CaO	32	3.2	14	14	17	19 (12)	18 (10)	19 (12)	18 (10)
Magnesium oxide, MgO	9.0	9.0	9.0	9.0	3.8	0.2	0.2	0.2	0.2
Alkalies, Na_2O, K_2O	3.7	3.7	3.7	3.7	0.9	1.1	1.3	1.1	1.3
Thermal Conductivity, BTU•in/hr•ft²•°F, ASTM C 417									
mean temperature @ 500°F	0.87	1.03	0.79	0.93	1.45	1.48	1.48	1.48	1.48
@ 1000°F	1.02	1.11	0.98	1.06	1.60	1.63	1.63	1.63	1.63
@ 1500°F	1.16	1.20	1.11	1.26	1.85	1.79	1.79	1.79	1.79
@ 2000°F	-	-	-	-	-	1.97	1.97	1.97	1.97
Pounds per Bag	25	25	25	25	50	40	40	40	40
Shelf Life, Months	12	12	12	12	12	12	12	12	12

1. Properties indicated are for vibratory cast materials only unless specified otherwise.
2. Gunite installation may require 10-30% more material due to compaction and rebound loss.
3. Water requirements indicated are offered as a guide. Actual water required may be subject to field conditions. Consult Morgan Thermal Ceramics installation advisor for assistance.
4. Fired linear change values reflect samples taken from a dried to fired state.
5. Chemical analysis % for CaO in parenthesis indicates the % of reactive CaO present if less than the total. The balance is Calcia from the anorthite aggregate.

Monolithics - Insulating Medium Weight

MSDS Number	103	154	103	154	154
Technical Datasheet Number	314-102	314-102	314-102	314-102	314-102
Product Name	**Kaolite® 2200-HS**	**Kaolite 2200-HS Gun**	**Kaolite 2500-HS**	**Kaolite 2500-HS Gun**	**Kaolite 2500-EXHS**
Method of Installation[1]	cast	gun	cast	gun	gun
Average lbs. Req. to Place One Cubic Ft.[2]	73	76	83	84	86
Recommended Water, %[3]					
casting by vibrating	37 - 44	-	28 - 35	-	-
Recommended Temperature Use Limit, °F	2200	2200	2500	2500	2500
Density, pcf					
fired @ 1500°F	68 - 78	69 - 79	79 - 89	79 - 89	82 - 91
fired @ temperature use limit	68 - 78	72 - 80	80 - 88	76 - 88	84 - 94
Modulus of Rupture, psi, ASTM C 133					
dried 18-24 hrs. @ 220°F	250 - 400	300 - 550	250 - 400	250 - 400	400 - 600
fired 5 hrs. @ 1500°F	175 - 350	250 - 450	225 - 375	250 - 500	325 - 550
Cold Crushing Strength, psi, ASTM C 133					
dried 18 - 24 hrs @ 220°F	850 - 1400	900 - 1500	700 - 1200	700 - 1200	1000 - 1600
fired 5 hrs. @ 1500°F	750 - 1400	900 - 1600	850 - 1600	900 - 1600	1000 - 1700
fired 5 hrs. @ temperature use limit	700 - 1200	900 - 1600	900 - 1500	900 - 1600	1100 - 1800
Permanent Linear Change, %, ASTM C 113[4]					
dried 18 - 24 hrs. @ 220°F	0 to -0.2	0 to -0.2	0 to -0.2	0 to -0.2	0 to -0.2
fired 5 hrs. @ 1500°F	-0.1 to -0.5	-0.2 to -0.55	-0.1 to -0.4	-0.2 to -0.5	-0.2 to -0.5
fired 5 hrs. @ temperature use limit	-0.3 to -1.0	-0.6 to -1.5	-1.5 to +1.5	-0.5 to +0.5	-0.6 to +0.5
Chemical Analysis, %, Weight Basis After Firing[5]					
Alumina, Al_2O_3	43	41	44	42	42
Silica, SiO_2	28	31	35	38	37
Ferric oxide, Fe_2O_3	3.2	3.0	2.6	2.5	2.4
Titanium oxide, TiO_2	1.8	1.2	1.0	1.0	1.3
Calcium oxide, CaO	23 (17)	21 (16)	17 (13)	15 (11)	16 (11)
Magnesium oxide, MgO	0.4	0.4	0.1	0.1	0.2
Alkalies, Na_2O, K_2O	0.5	0.5	0.7	0.7	0.5
Thermal Conductivity, BTU•in/hr•ft²•°F, ASTM C 417					
mean temperature @ 500°F	1.90	1.90	2.8	2.8	2.8
@ 1000°F	2.02	2.02	3.0	3.0	3.0
@ 1500°F	2.11	2.11	3.2	3.2	3.2
@ 2000°F	2.19	2.19	3.4	3.4	3.4
@ 2500°F	-	-	3.5	3.5	3.5
Pounds per Bag	50	50	50	50	50
Shelf Life, Months	12	12	12	12	12

1. Properties indicated are for vibratory cast materials only unless specified otherwise.
2. Gunite installation may require 10-30% more material due to compaction and rebound loss.
3. Water requirements indicated are offered as a guide. Actual water required may be subject to field conditions. Consult Morgan Thermal Ceramics installation advisor for assistance.
4. Fired linear change values reflect samples taken from a dried to fired state.
5. Chemical analysis % for CaO in parenthesis indicates the % of reactive CaO present if less than the total. The balance is Calcia from the anorthite aggregate.

Monolithics - Insulating - Low Iron

MSDS Number	103	103	153	103	153	103	153
Technical Datasheet Number	314-103	314-103	314-103	314-103	314-103	314-103	314-103
Product Name	**Kaolite® 2000-LI**	**Kaolite 2300-LI**	**Kaolite 2300-LI Gun**	**Kaolite 2500-LI**	**Kaolite 2500-LI Gun**	**Kaolite 2600-LI**	**Kaolite 2600-LI Gun**
Method of Installation[1]	cast/gun	cast	gun	cast	gun	cast	gun
Average lb Required to Place One Cu. Ft.[2]	45	61	63	68	71	83	84
Recommended Water, %[3]							
casting by vibrating	65 - 75	46 - 54	-	38 - 47	-	28 - 35	-
pouring	78 - 85	-	-	-	-	-	-
Recommended Temperature Use Limit, °F	2000	2300	2300	2500	2500	2600	2600
Density, pcf, fired							
@ 1500°F	41 - 49	55 - 66	56 - 68	62 - 74	63 - 75	78 - 88	79 - 89
@ use limit temperature	41 - 48	55 - 66	56 - 68	64 - 76	64 - 76	80 - 89	80 - 89
Modulus of Rupture, psi, ASTM C 133							
dried 18-24 hrs. @ 220°F	110 - 220	120 - 200	100 - 180	200 - 300	150 - 250	300 - 500	300 - 500
fired 5 hrs. @ 1500°F	85 - 155	110 - 250	110 - 250	150 - 300	120 - 250	225 - 400	250 - 400
@ use limit temperature	90 - 145	150 - 300	135 - 350	200 - 350	250 - 400	500 - 900	500 - 900
Cold Crushing Strength, psi, ASTM C 133							
dried 18-24 hrs. @ 220°F	325 - 500	350 - 600	350 - 600	500 - 800	450 - 650	800 - 1200	800 - 1500
fired 5 hrs. @ 1500°F	225 - 525	350 - 1000	350 - 900	600 - 1200	500 - 900	700 - 1300	850 - 1500
@ use limit temperature	195 - 275	400 - 950	400 - 900	900 - 1500	600 - 1000	1200 - 1800	1000 - 2000
Permanent Linear Change, %, ASTM C 113[4]							
dried 18-24 hrs. @ 220°F	0 to -0.2	0 to -0.2	0 to -0.2	0 to -0.2	0 to -0.2	0 to -0.2	0 to -0.2
fired 5 hrs. @ 1500°F	-0.4 to -0.9	-0.1 to -0.55	-0.2 to -0.6	-0.1 to -0.4	-0.2 to -0.5	-0.1 to -0.4	-0.2 to -0.5
@ use limit temperature	-1.2 to -1.8	-1.0 to -2.0	-1.0 to -2.0	-0.5 to -1.5	-0.5 to -1.5	-0.5 to -1.5	0 to -1.5
Chemical Analysis, %, Weight Basis After Firing[5]							
Alumina, Al_2O_3	40	41	39	43	42	47	45
Silica, SiO_2	35	37	40	36	37	36	38
Ferric oxide, Fe_2O_3	1.1	0.9	0.9	0.9	0.9	1.0	1.0
Titanium oxide, TiO_2	1.2	1.4	1.4	1.6	1.8	1.7	1.8
Calcium oxide, CaO	19	18 (10)	17 (9)	17 (11)	17 (11)	13 (10)	13 (10)
Magnesium oxide, MgO	0.4	0.4	0.4	0.2	0.2	0.2	0.2
Alkalies, as Na_2O, K_2O	2.6	1.1	1.1	1.3	1.3	0.7	0.7
Thermal Conductivity, BTU•in./hr•ft²•°F, ASTM C 417							
mean temperature @ 500°F	1.14	1.46	1.46	1.86	1.86	2.7	2.9
@ 1000°F	1.44	1.65	1.65	2.05	2.05	2.9	2.9
@ 1500°F	1.74	1.82	1.82	2.25	2.25	3.0	3.0
@ 2000°F	-	2.00	2.00	2.46	2.46	3.2	3.2
Pounds per bag	25	40	40	50	50	50	50
Shelf Life, Months	12	12	12	12	12	12	12

1. Properties indicated are for vibratory cast materials only unless specified otherwise.
2. Gunite installation may require 10-30% more material due to compaction and rebound loss.
3. Water requirements indicated are offered as a guide. Actual water required may be subject to field conditions. Consult Morgan Thermal Ceramics installation advisor for assistance.
4. Fired linear change values reflect samples taken from a dried to fired state.
5. Chemical analysis % for CaO in parenthesis indicates the % of reactive CaO present if less than the total. The balance is Calcia from the anorthite aggregate.

Monolithics - Insulating

MSDS Number	117	153	101
Technical Datasheet Number	314-104	314-104	314-104
Product Name	**Kaolite® 2800**	**Kaolite 3000**	**Kaolite 3300**
Method of Installation[1]	cast/gun	cast	cast
Average lb Required to Place One Cu. Ft.[2]	95	98	95
Recommended Water, %[3]			
casting by vibrating	19 - 24	14 - 20	11 - 13
Recommended Temperature Use Limit, °F	2800	3000	3300
Density, pcf, fired			
@ 1500°F	86 - 104	95 - 108	92 - 99
Modulus of Rupture, psi, ASTM C 133			
dried 18-24 hrs. @ 220°F	300 - 500	250 - 400	600 - 1000
fired 5 hrs. @ 1500°F	250 - 400	300 - 550	600 - 1000
@ use limit temperature	600 - 1000	850 - 1200	1000 - 1850
Cold Crushing Strength, psi, ASTM C 133			
dried 18-24 hrs. @ 220°F	950 - 1200	1000 - 1800	2000 - 3500
fired 5 hrs. @ 1500°F	900 - 1500	1000 - 2000	1000 - 2900
@ use limit temperature	1500 - 2500	1700 - 2200	3000 - 4000
Permanent Linear Change, %, ASTM C 113[4]			
dried 18-24 hrs. @ 220°F	0 to -0.2	0 to -0.2	0 to -0.2
fired 5 hrs. @ 1500°F	-0.4 to -0.8	-0.1 to -0.3	-0.1 to -0.3
@ use limit temperature	-0.8 to +0.8	-1.0 to -2.5	0 to -0.6
Chemical Analysis, %, Weight Basis After Firing[5]			
Alumina, Al_2O_3	53	58	94
Silica, SiO_2	37	35	0.5
Ferric oxide, Fe_2O_3	1.0	1.0	0.2
Titanium oxide, TiO_2	1.8	0.6	-
Calcium oxide, CaO	5.9	5.6	4.6
Magnesium oxide, MgO	0.4	0.2	0.1
Alkalies, as Na_2O, K_2O	1.1	0.4	0.5
Thermal Conductivity, BTU•in./hr•ft²•°F, ASTM C 417			
mean temperature @ 500°F	3.4	3.6 (estimated)	9.9
@ 1000°F	3.7	3.7	8.0
@ 1500°F	3.9	3.9	7.3
@ 2000°F	4.2	4.3	7.3
@ 2500°F	4.5	4.8	7.7
Pounds per bag	50	50	50
Shelf Life, Months	12	12	12

1. Properties indicated are for vibratory cast materials only unless specified otherwise.
2. Gunite installation may require 10-30% more material due to compaction and rebound loss.
3. Water requirements indicated are offered as a guide. Actual water required may be subject to field conditions. Consult Morgan Thermal Ceramics installation advisor for assistance.
4. Fired linear change values reflect samples taken from a dried to fired state.
5. Chemical analysis % for CaO in parenthesis indicates the % of reactive CaO present if less than the total. The balance is Calcia from the anorthite aggregate.

Monolithics - Dense

MSDS Number	102	102	102	102	102	102	102	102
Technical Datasheet Number	314-105	314-105	314-105	314-105	314-105	314-105	314-105	314-105
Product Name	**Kaocrete® B**	**Kaocrete D**	**Kaocrete HS**	**Kaocrete 26**	**Kaocrete 28-LI**	**Kaocast®**	**Kaocrete 30**	**Kaocrete 32-CM**
Method of Installation[1]	cast/gun/ hand ram	cast	cast	cast/gun	cast/gun	cast/gun	cast	cast
Avg. lb Required to Place one Cu. Ft.[2]	100	127	125	122	127	126	138	147
Recommended Water, %[3]								
casting by vibrating	-	9 - 11.5	9 - 11.5	10- 11.5	10 - 11.5	10 - 12.5	8 - 9.5	8 - 10
Recommended Temperature Use Limit, °F	2000	2500	2600	2600	2800	3000	3000	3200
Density, pcf, fired								
@ use limit temperature	97 - 108	123 - 134	121 - 132	121 - 132	121 - 132	123 - 131	134 - 143	142 - 153
Modulus of Rupture, psi, ASTM C 133								
dried 18-24 hrs. @ 220°F	200 - 600	1000 - 1400	1100 - 1600	500 - 900	600 - 1000	700 - 1200	700 - 1300	500 - 1000
fired 5 hrs. @ 1500°F	150 - 300	400 - 800	450 - 850	300 - 500	325 - 550	325 - 550	350 - 700	400 - 700
@ use limit temperature	200 - 400	1000 - 1500	900 - 1200	1000 - 1500	1000 - 1500	500 - 900	1500 - 2000	1500 - 2500
Cold Crushing Strength, psi, ASTM C 133								
dried 18-24 hrs. @ 220°F	1000 - 1800	4500 - 7000	5000 - 7000	2500 - 3400	2700 - 4000	2100 - 3000	5000 - 7000	3500 - 4300
fired 5 hrs. @ 1500°F	700 - 1500	3500 - 6000	3500 - 6500	2000 - 3000	2000 - 3000	1800 - 2500	2500 - 5500	2500 - 4500
@ use limit temperature	400 - 800	4500 - 6000	4000 - 6000	2800 - 3800	4000 - 6000	2000 - 3000	4500 - 5500	6000 - 8000
Permanent Linear Change, %, ASTM C 113[4]								
dried 18-24 hrs. @ 220°F	0 to -0.2	0 to -0.2	0 to -0.2	0 to -0.2	0 to -0.2	0 to -0.2	0 to -0.2	0 to -0.2
fired 5 hrs. @ 1500°F	-0.5 to -2.0	-0.1 to - 0.4	-0.1 to -0.4	-0.1 to -0.4	-0.1 to -0.4	-0.1 to -0.4	-0.1 to -0.4	-0.1 to -0.4
@ use limit temperature	-1.0 to -2.5	-0.4 to - 1.0	-0.5 to +0.5	0 to +1.0	-0.5 to +0.5	-0.5 to +0.5	0 to +1.5	0 to +1.5
Chemical Analysis, %, Weight Basis After Firing								
Alumina, Al_2O_3	38	45	48	47	50	59	60	67
Silica, SiO_2	46	40	40	43	41	35	34	28
Ferric oxide, Fe_2O_3	1.3	2.3	1.0	1.1	0.9	1.0	0.7	0.9
Titanium oxide, TiO_2	1.3	2.1	1.8	2.4	2.0	1.9	1.6	1.8
Calcium oxide, CaO	12	9.8	8.0	6.4	5.6	3.4	3.3	2.4
Magnesium oxide, MgO	0.9	trace	0.1	0.1	0.1	0.1	0.1	0.1
Alkalies as Na_2O	0.3	0.3	0.3	0.2	0.2	0.2	0.2	0.2
Thermal Conductivity, BTU•in./hr•ft²•°F, ASTM C 417								
mean temperature @ 500°F	3.3	6.2	5.9	5.6	6.0	8.1	9.7	11.6
@ 1000°F	3.5	6.6	6.2	6.0	6.3	7.8	9.6	11.1
@ 1500°F	3.8	6.8	6.5	6.3	6.6	7.7	9.6	10.9
@ 2000°F	4.1	6.9	6.7	6.4	6.7	7.7	9.7	10.4
Pounds per Bag	55	55	55	55	55	55	55	55
Shelf Life, Months	12	12	12	12	12	12	12	12

1. Properties indicated are for vibratory cast materials only unless specified otherwise.
2. Gunite installation may require 10-30% more material due to compaction and rebound loss.
3. Water requirements indicated are offered as a guide. Actual water required may be subject to field conditions. Consult Morgan Thermal Ceramics installation advisor for assistance.
4. Fired linear change values reflect samples taken from a dried to fired state.

Monolithics - Dense Gunning

MSDS Number	104	104	120
Technical Datasheet Number	314-106	314-106	314-106
Product Name	**Kaogun® 26**	**Kaogun 28**	**Kaogun 30**
Method of Installation[1]	gun/hand ram	gun/hand ram	gun/hand ram
Average lb Required to Place One Cu. Ft.[2]	122	126	133
Recommended Water, %[3] rammed	4 - 6	4 - 6	4 - 5
Recommended Temperature Use Limit, °F	2600	2800	3000
Melting Point, °F	3000	3100	3200
Density, pcf fired @ 1500°F	117 - 126	117 - 126	128 - 138
Typical Rebound, Gunning, %	8 - 12	8 - 12	10 - 15
Modulus of Rupture, psi, ASTM C 133			
dried 18-24 hrs. @ 220°F	400 - 800	570 - 835	500 - 800
fired 5 hrs. @ 1500°F	250 - 450	300 - 500	300 - 450
@ use limit temperature	800 - 1400	750 - 1450	500 - 900
Cold Crushing Strength, psi, ASTM C 133			
dried 18-24 hrs. @ 220°F	1900 - 3000	2200 - 3150	2000 - 3000
fired 5 hrs. @ 1500°F	1400 - 2300	1500 - 2500	1700 - 2500
@ use limit temperature	2600 - 3500	3120 - 4000	4000 - 5500
Permanent Linear Change, %, ASTM C 113[4]			
dried 18-24 hrs. @ 220°F	0 to -0.2	0 to -0.2	0 to -0.2
fired 5 hrs. @ 1500°F	-0.1 to -0.4	-0.1 to -0.4	-0.1 to -0.3
@ use limit temperature	0 to +1.0	-0.3 to +0.5	-0.5 to -1.2
Chemical Analysis, %, Weight Basis After Firing			
Alumina, Al_2O_3	47	49	61
Silica, SiO_2	43	42	33
Ferric oxide, Fe_2O_3	1.1	0.9	0.8
Titanium oxide, TiO_2	2.0	2.1	1.9
Calcium oxide, CaO	6.4	6.0	3.6
Magnesium oxide, MgO	0.2	0.1	0.1
Alkalies as Na_2O	0.2	0.2	0.3
Thermal Conductivity, BTU•in./hr•ft²•°F, ASTM C 417			
mean temperature @ 500°F	5.2	5.3	7.6
@ 1000°F	5.4	5.5	7.6
@ 1500°F	5.7	5.8	7.7
@ 2000°F	5.8	6.1	7.6
Pounds per Bag	55	55	55
Shelf Life, Months	12	12	12

1. Properties indicated are for vibratory cast materials only unless specified otherwise.
2. Gunite installation may require 10-30% more material due to compaction and rebound loss.
3. Water requirements indicated are offered as a guide. Actual water required may be subject to field conditions. Consult Morgan Thermal Ceramics installation advisor for assistance.
4. Fired linear change values reflect samples taken from a dried to fired state.

Monolithics - Low Cement

MSDS Number	119	119	111	111	111	111	111	119	119
Technical Datasheet Number	314-107	314-107	314-108	314-120	314 - 121	314-109	314-109	314-110	314-110
Product Name	**Kaocrete® 249C**	**Kaocrete 250C**	**Hicast® Super**	**Hicast 90**	**Hicast 90TR**	**Morflo® 160**	**Morflo 170**	**Higun® 160**	**Higun 170**
Method of Installation	vib. cast	vib. cast	vib.cast	vib. cast	vib. cast	vib. cast	vib. cast	gun	gun
Ave. lb Required to Place One Cu. Ft.	138	150	140	183	182	152	178	137	143
Rec. Water, %, Casting by Vibrating	5.8 - 6.3	5.6 - 6.2	5.4 - 6.2	4.5 - 5.2	4.0 - 4.8	5.5 - 6.3	5.6 - 6.4	-	-
Rec. Temperature Use Limit, °F	2800	3200	2800	3400	3200	2912	3092	2912	3092
Density, pcf fired @ 1500°F	135 - 143	145 - 156	135 - 144	178 - 188	172 - 182	146 - 155	172 - 182	-	-
Modulus of Rupture, psi, ASTM C 133									
dried 18-24 hrs. @ 220°F	800-1200	1600-2600	1200-2000	1600-2400	-	-	-	-	-
fired 5 hrs. @ 1500°F	800-1300	2100-3700	1200-2000	1500-2100	-	-	-	-	-
@ use limit temperature	1600-2300	3000-4500	-	-	-	-	-	-	-
Hot Modulus of Rupture, psi, ASTM C 583									
@ 1500°F	1300-1700	2500-3300	1700-2500	-	-	-	-	-	-
@ 2000°F	1100-1600	1900-2600	2300-3100	-	-	-	-	-	-
@ 2250°F	800-1200	1000-1600	900-1300	-	-	-	-	-	-
@ 2500°F	300-500	500-900	700-1050	-	-	-	-	-	-
Cold Crushing Strength, psi, ASTM C 133									
dried 18-24 hrs. @ 220°F	6000-9000	8000-12000	8000-10000	10000-13000	9000-13000	8000-13000	11000-15000	12000-14000	13000-15000
fired 5 hrs. @ 1500°F	6000-9000	8000-12000	8000-12000	11000-17000	11000-17000	9000-14000	12000-18000	7000-10000	7500-10000
@ 2000°F	-	-	-	-	-	11000-18000	13000-20000	10500-13000	9300-11500
@ use limit temperature	9000-13000	7000-12500	10000-13000	13000-18000	-	13500-20500	15000-22000	10000-15000	10000-16000
Deformation Under Hot Load, % @ 25 psi, ASTM C 16									
1½ hrs. @ 2640°F	1.9	0.5	1.4	-0.6	-	-	-	-	-
24 hrs. @ 2640°F	-	1.4	-	-	-	-	-	-	-
1½ hrs. @ 2822°F	-	1.9	-	-	-	-	-	-	-
Permanent Linear Change, %, ASTM C 113									
dried 18-24 hrs. @ 220°F	0 to -0.2	0 to -0.2	0 to -0.2	0 to -0.2	0 to -0.1	0.0 to -0.2	0.0 to -0.2	-	-
fired 5 hrs. @ 1500°F	-0.1 to -0.3	-0.1 to -0.3	-0.1 to -0.3	-0.1 to -0.3	-0.1 to -0.3	-0.1 to -0.3	-0.1 to -0.3	-0.3	-0.2
@ use limit temperature	-0.2 to -0.6	-2.5 to -3.5	-0.5 to -1.2	-0.5 to +0.5	-	-0.5 to -1.5	-0.5 to -1.5	-1.5	+1.4
Abrasion Loss, cc's, ASTM C 704	8 - 12	6 - 10	8 -12	5 - 8	4 - 6	4 - 6	4 - 6	6 - 8	6 - 8
Chemical Analysis, %, Weight Basis After Firing									
Alumina, Al_2O_3	50	65	46	93	91	52	82	47	66
Silica, SiO_2	46	30	47	5	6.6	42	11	48	27
Ferric oxide, Fe_2O_3	0.8	0.8	1.1	0.1	0.2	0.6	1.2	0.5	1.0
Titanium oxide, TiO_2	1.5	2.2	1.2	-	-	3.2	3.1	-	-
Calcium oxide, CaO	1.9	1.7	1.9	1.5	-	1.5	1.5	2.9	2.9
Magnesium oxide, MgO	0.1	0.1	0.1	-	-	0.2	0.1	-	-
Alkalies, as Na_2O	0.1	0.1	0.8	0.4	0.4	-	-	-	-
Thermal Conductivity, BTU•in./hr•ft²•°F, ASTM C 417									
mean temperature @ 500°F	9.9	12.6	11.3	28.3	-	11.0	15.9	10.75	12.27
@ 1000°F	10.4	12.1	11.6	23.0	-	-	-	-	-
@ 1500°F	10.9	12.0	11.9	20.0	-	-	-	-	-
@ 2000°F	11.3	12.3	12.1	18.5	-	-	-	-	-
Pounds per Bag	55	55	55	55	55	55	55	55	55
Shelf Life, Months	12	12	9	9	6	9	9	9	9

1. Properties indicated are for vibratory cast materials only unless specified otherwise.
2. Gunite installation may require 10-30% more material due to compaction and rebound loss.
3. Water requirements indicated are offered as a guide. Actual water required may be subject to field conditions. Consult Morgan Thermal Ceramics installation advisor for assistance.
4. Fired linear change values reflect samples taken from a dried to fired state.

Monolithics - Low Cement Molten Aluminum Resistance

MSDS Number	102	105
Technical Datasheet Number	314-118	314-118
Product Name	**Alcast® Extra HS**	**Albond®**
Method of Installation	vib. cast	vib. cast
Ave. lb Required to Place One Cu. Ft.	180	174
Rec. Water, %, Casting by Vibrating	5.0 - 5.8	5.5 - 6.5
Rec. Temperature Use Limit, °F	2370	2550
Density, pcf fired @ 1500°F	-	172 - 176
@ use limit temperature	178 - 182	170
Cold Crushing Strength, psi, ASTM C 133		
dried 18-24 hrs. @ 220°F	11000 - 15000	10000-14000
fired 5 hrs. @ 1500°F	12000 - 18000	11000 - 15000
@ use limit temperature	13000 - 20300	14500 - 29000
Permanent Linear Change, %, ASTM C 113		
dried 18-24 hrs. @ 220°F	0 to -0.2	0 to -0.2
fired 5 hrs. @ 1500°F	-0.1 to -0.3	-0.1 to -0.3
@ use limit temperature	-0.2 to -0.6	-0.2 to -0.5
Chemical Analysis, %, Weight Basis After Firing		
Alumina, Al_2O_3	77	81.7
Silica, SiO_2	12	11
Ferric oxide, Fe_2O_3	1.1	1.2
Calcium oxide, CaO	1.4	1.8
Thermal Conductivity, BTU•in./hr•ft²•°F, ASTM C 417		
mean temperature @ 1000°F	15.9	15.9
Pounds per Bag	50	50
Shelf Life, Months	6	6

Monolithics - Clay Bonded Plastics

MSDS Number	111	111	111	111	111	111
Technical Datasheet Number	314-116	314-116	314-111	314-111	314.115	314.115
Product Name	**Plascast® 60**	**Plasgun® 60**	**Plascast HT**	**Plasgun HT**	**Plascast 90**	**Plasgun 90**
Method of Installation	cast/ram	hand ram /trowel	cast/ram	hand ram /trowel	cast/ram	hand ram /trowel
Average lb Required to Place One Cu. Ft.	145	140	145	140	153	149
Rec. Water, %, Casting by Vibrating	8.5 - 10.0	-	8.5 - 10.0	-	8.5 - 10.0	-
Rec. Temperature Use Limit, °F	3000	3000	3100	3100	3100	3100
Density, pcf fired @ 1500°F	140 - 150	137 - 146	-	-	-	-
@ Use Limit Temperature	141 - 152	139 - 148	141 - 151	135 - 146	147 - 156	138 - 148
Cold Crushing Strength, psi, ASTM C 133						
dried 18-24 hrs. @ 220°F	500 - 900	500 - 900	500 - 800	450 - 800	500 - 800	450 - 800
@ 2000°F	1700 - 3000	2000 - 4000	2500 - 4000	1500 - 2500	2000 - 4000	1200 - 2000
@ use limit temperature	2800 - 4500	3000 - 5000	4000 - 6000	2500 - 3500	3500 - 6000	2000 - 3500
Permanent Linear Change, %, ASTM C 113						
dried 18-24 hrs. @ 220°F	0.0 to -0.2	0 to -0.2	0.0 to -0.2	0 to -0.2	0.0 to -0.2	0.0 to -0.2
fired 5 hrs. @ 1500°F	-	-	-0.1 to -0.4	-0.1 to -0.4	-0.1 to -0.4	-0.1 to -0.4
@ use limit temperature	-0.1 to -0.4	-0.1 to -0.4	-0.5 to +1.0	-0.5 to +1.0	-0.5 to 1.5	-0.5 to +1.5
Chemical Analysis, %, Weight Basis After Firing						
Alumina, Al_2O_3	59	59	65	66	89	89
Silica, SiO_2	37	37	31	28	6.7	6.4
Ferric oxide, Fe_2O_3	1.5	1.5	1.5	1.7	1.4	1.5
Titanium oxide, TiO_2	1.8	1.8	1.8	1.8	1.8	1.8
Alkalies, as Na_2O	0.7	0.7	0.7	1.1	0.7	0.9
Thermal Conductivity, BTU•in./hr•ft²•°F, ASTM C 417						
mean temperature @ 500°F	5.8	5.8	8.9	6.3	11.5	7.9
@ 1000°F	6.3	6.3	9.0	6.5	11.0	7.6
@ 1500°F	6.7	6.7	9.1	6.6	10.4	7.5
@ 2000°F	7.0	7.0	8.8	6.6	9.8	7.6
Pounds per Bag	55	55	55	55	55	55
Shelf Life, Months	3	9	3	9	3	9

Monolithics - Special Duty

MSDS Number	101	101	101	101
Technical Datasheet Number	314-112	314-112	314-112	314-112
Product Name	**Kao-Tab® SR**	**Kao-Tab 95**	**Kao-Tab 95 Gun**	**Kao-Tab HDHS-98**
Method of Installation	gun/hand ram	cast	gun/hand ram	cast
Average lb Required to Place One Cu. Ft.	165	161	161	180
Recommended Water, %				
casting by vibrating	-	8 - 10	-	5.5 - 7.0
ramming	5 - 8	-	5 - 8	-
Recommended Temperature Use Limit, °F	3000	3400	3400	3400
Density, pcf, fired, @ 1500°F	160 - 170	156 - 167	156 - 167	175 - 186
Modulus of Rupture, psi, ASTM C 133				
dried 18-24 hrs. @ 220°F	1000 - 1400	1300 - 1900	1400 - 2000	700 - 1200
fired 5 hrs. @ 1500°F	1000 - 1500	1000 - 1600	1200 - 2000	600 - 900
@ use limit temperature	1500 - 2200	1400 - 1900	1400 - 2000	1000 - 1400
Cold Crushing Strength, psi, ASTM C 133				
dried 18-24 hrs. @ 220°F	5000 - 9000	6000 - 9000	5000 - 7500	4700 - 6500
fired 5 hrs. @ 1500°F	5000 - 8500	6000 - 10000	5000 - 9000	4000 - 7000
@ use limit temperature	6000 - 9000	6000 - 9000	6000 - 9000	6000 - 8500
Permanent Linear Change, %, ASTM C 113				
dried 18-24 hrs. @ 220°F	0 to -0.2	0.0 to -0.2	0.0 to -0.2	0 to -0.2
fired 5 hrs. @ 1500°F	-1.0 to -0.3	-0.1 to -0.3	-0.1 to -0.3	0 to -0.4
@ use limit temperature	-	0 to -1.5	0 to -1.5	-0.2 to -0.7
Abrasion Loss, cm^3, ASTM C 704	18 - 24	10 - 19	13 - 20	8 - 15
Chemical Analysis, %, Weight Basis After Firing				
Alumina, Al_2O_3	88	95	95	98
Silica, SiO_2	0.2	0.2	0.2	0.1
Ferric oxide, Fe_2O_3	7.1	0.1	0.2	-
Titanium oxide, TiO_2	-	trace	trace	-
Calcium oxide, CaO	4.2	4.6	4.2	1.8
Magnesium oxide, MgO	-	trace	trace	-
Alkalies, as Na_2O	0.2	0.1	0.1	0.1
Thermal Conductivity, BTU•in./hr•ft^2•°F, ASTM C 417				
mean temperature @ 500°F	12.7	16.6	18.1	21.4
@ 1000°F	11.6	13.8	15.3	17.4
@ 1500°F	11.0	12.2	13.3	15.2
@ 2000°F	9.7	11.3	12.1	13.1
@ 2500°F	9.2	10.7	11.2	-
Pounds per Bag	50	50	50	50
Shelf Life, Months	12	12	12	12

Monolithics - Special Duty - Abrasion Resistant

MSDS Number	108	108	108	108	108	108	108
Technical Datasheet Number	314-113	314-113	314-113	314-113	314-113	314-113	314-113
Product Name	**Kao-Tuff® C**	**Kao-Tuff G**	**Kao-Tuff 110C**	**Kao-Tuff 110FF**	**Kao-Tuff 110G**	**Kao-Tuff FS**	**Kao-Tuff FS Gun**
Method of Installation	cast	gun	cast	free flow/ pump cast	gun	cast	gun/hand ram
Average lb Required to Place One Cu. Ft.	136	136	110	111	111	125	125
Recommended Water, %, casting by vibrating	8 - 10	-	13 - 15.5	14 - 16	13.5 - 15	5.5 - 6.5	-
Recommended Temperature Use Limit, °F	2800	2800	2400	2400	2400	2372	2372
Density, pcf, fired							
@ 1500°F	132 - 141	132 - 142	106 - 115	107 - 116	106 - 114	121 - 131	121 - 131
@ use limit temperature	-	-	106 - 115	106 - 115	105 - 116	-	--
Modulus of Rupture, psi, ASTM C 133							
dried 18-24 hrs. @ 220°F	1200 - 2000	900 - 1400	1200 - 1800	-	1500 - 2000	-	-
fired 5 hrs. @ 1500°F	900 - 1400	1000 - 1800	800 - 1150	650 - 1000	800 - 1200	800 - 1200	600 - 1000
@ use limit temperature	1200 - 2000	1300 - 19000	800 - 1200	650 - 1000	900 - 1300	-	-
Cold Crushing Strength, psi, ASTM C 133							
dried 18-24 hrs. @ 220°F	6600 - 9000	5000 - 8000	6000 - 9000	-	6500 - 9000	6500 - 10000	-
fired 5 hrs. @ 1500°F	6000 - 9000	7000 - 10000	6000 - 9500	5500 - 9500	6500 - 10500	6000 - 10000	5000 - 8000
@ use limit temperature	8000 - 11000	8000 - 10000	6500 - 9500	6000 - 9000	7000 - 10000	6000 - 10000	-
Permanent Linear Change, %, ASTM C 113							
dried 18-24 hrs. @ 220°F	0 to -0.2	0 to -0.2	0 to -0.2	0 to -0.2	0 to -0.2	0 to -0.1	0 to -0.1
fired 5 hrs. @ 1500°F	-0.1 to -0.3	-0.1 to -0.3	-0.1 to -0.3	-0.1 to -0.3	-0.1 to -0.3	-0.1 to -0.3	-0.1 to -0.3
@ use limit temperature	-1.0 to -2.5	-1.0 to -1.8	-0.6 to +0.4	-0.6 to +0.4	-0.6 to +0.4	0.2 to -0.5	-0.2 to -0.5
Abrasion Loss, cm^3, ASTM C 704	8 - 15	9 - 15	8 - 14	11 - 17	7 - 14	7 - 15	8 - 16
Chemical Analysis, %, Weight Basis After Firing							
Alumina, Al_2O_3	59	57	47	47	49	19	-
Silica, SiO_2	33	34	35	34	33	76	-
Ferric oxide, Fe_2O_3	0.8	0.6	1.6	1.6	1.7	0.4	-
Titanium oxide, TiO_2	1.3	1.4	0.8	0.8	0.7	0.4	-
Calcium oxide, CaO	5.5	6.5	14	15	14	2.3	-
Magnesium oxide, MgO	0.2	0.2	0.4	0.4	0.4	0.1	-
Alkalies, as Na_2O	0.3	0.4	0.5	0.5	0.3	0.1	-
Thermal Conductivity, BTU•in./hr•ft^2•°F, ASTM C 417							
mean temperature @ 500°F	8.9	7.3	5.3	5.3	4.9	8.4	8.5
@ 1000°F	9.0	7.3	5.4	5.4	5.0	9.3	9.4
@ 1500°F	8.9	7.5	5.5	5.5	5.1	9.8	9.8
@ 2000°F	8.7	7.7	5.6	5.6	5.2	9.9	9.9
Pounds per Bag	55	55	55	55	55	50	50
Shelf Life, Months	12	12	12	12	12	9	9

Fired Refractory Shapes Overview

Morgan Thermal Ceramics refractory fired shapes are used in a wide range of critical, heat intensive applications.

High alumina, silicon carbide, fused silica and alumina-zirconia-silica (AZS) compositions are thixotropically cast to precise customer specifications.

These products feature superior hot strengths, thermal shock resistance, and provide long refractory life.

Cerox®
Cerox fired refractory shapes are thixotropically cast using a dispersion agent, which allows the Cerox mix to flow when vibrated without requiring a high water content. These manufacturing techniques, combined with precisely controlled firing and 100% product inspection, produce high-quality components suited to the most arduous of high temperature environments.

- Variety of available compositions using high-alumina, fused zirconia mullite, and silicon carbide
- Excellent chemical attack resistance
- Excellent thermal shock resistance
- Low gas permeability
- Tight tolerance capability

Valcor®
Valcor fired refractory shapes, available in two compositions:

- G - high alumina mix
- G-AZ - AZS premium grade and has a proven track record in molten glass contact applications.

The shapes are engineered to meet precise customer specifications and are individually inspected.

- Years of proven performance in molten glass contact applications
- Very smooth surface finish
- Individual part inspection

MRI™
MRI cast fired shapes are used in a variety of super alloy melt-pour systems. The cast manufacture process meets the tight tolerance specifications required by end users. Precise tooling and detailed product inspection provide the user with a highquality, dimensionally accurate refractory shape.

- Variety of available compositions in high alumina, mullite and fused silica
- Tight tolerance capabilities
- Good non-wetting characteristics
- Excellent mechanical strength
- Proven performance in super alloy, and investment casting

Fired Refractory Shapes - MRI™

MSDS Number	DF201	DF201	DF201	DF201	DF201	DF201	DF201	DF103
Technical Datasheet Number	114-115	114-115	114-115	114-115	114-115	114-115	114-115	114-115
Product Name	**MRI 90V**	**MRI 96V**	**MRI 95C**	**MRI FS-63V**	**MRI FS-99V**	**MRI 90P**	**MRI 95P**	**MRI FS-85P**
Method of Forming	thix. cast	thix. cast	vib. cast	thix. cast	thix. cast	pressed	pressed	pressed
Chemical Analysis, %, Weight Basis After Firing								
Alumina, Al_2O_3	91	95	96	29.3	0.7	90	95	14
Silica, SiO_2	8	3.5	0.1	5.8	99	8.6	4.0	85
Ferric oxide, Fe_2O_3	0.15	0.2	0.1	0.17	0.1	0.4	0.4	0.3
Titanium oxide, TiO_2	0.1	trace	trace	0.3	trace	0.2	-	0.7
Calcium + Magnesium oxide, CaO + MgO	0.04	0.9	3.3	0.10	0.1	0.1	-	0.15
Alkalies, $Na_2O + K_2O$	0.15	0.3	0.3	0.1	0.1	0.3	0.3	0.45
Silicon carbide, SiC	-	-	-	64.7	-	-	-	-
Bulk Density, pcf, ASTM C 134	176	185	171	149	113	178	188	109
Apparent Porosity, %, ASTM C 20	20	17.5	25	20	12	23	20	22
Maximum Service Temperature, °F	3090	3040	3270	2732	2800	3090	3100	2750
Modulus of Rupture, psi, ASTM C 583	2500	5086	950	3600	1150	4000	4100	510
Coefficient of Thermal Expansion, in./in.•°F	4.1	4.9	4.5	2.3	0.2	4.2	4.5	3.2
Thermal Conductivity, BTU•in./hr•ft^2•°F, ASTM C 417								
mean temperature @ 2000°F	16	24.2	18.3	90	16.0	22.0	10.6	95

Thix. = Thixotropic; Vib. = Vibratory

Fired Refractory Shapes - Cerox®

MSDS Number	152	152	152	159	157	156	156	152	156
Technical Datasheet Number	114-15	114-15	114-15	114-15	114-15	114-15	114-15	114-15	114-15
Product Name	**Cerox® 100**	**Cerox 120**	**Cerox 200**	**Cerox 700**	**Cerox 720**	**Cerox 1000**	**Cerox 1200**	**Cerox 1300**	**Cerox 1400**
Chemical Analysis,%, Weight Basis After Firing									
Alumina, Al_2O_3	47	51	74	90	90	93	>99	64	35
Silica, SiO_2	50	46	22	10	9	5	0.4	12	5
Zirconia, ZrO_2	-	-	-	-	-	-	-	23	-
Silicon carbide, SiC	-	-	-	-	-	-	-	-	59
Ferric oxide, Fe_2O_3	1.0	0.6	1.0	0.2	0.2	0.5	0.1	0.2	0.2
Titanium oxide, TiO_2	1.9	1.5	2.3	0.1	0.1	0.7	trace	0.1	0.1
Magnesium oxide, MgO	0.1	trace	trace	trace	trace	trace	trace	trace	trace
Alkalies, as Na_2O	0.1	0.3	0.2	0.2	0.2	0.2	0.1	0.2	0.2
Bulk Density, pcf, ASTM C 134	154	136	161	173	176	179	183	190	161
Apparent Porosity, %, ASTM C 20	20	20	20	19	16	17	21	17	21
Permeability, ft/hr•ft²•in./psi	4	3	4	4	4	4	6	4	4
Melting Point, °F	3230	3230	3290	3410	3430	3560	3590	3200	>2800
Hot Modulus of Rupture, psi, ASTM C 583									
@ 75°F	1200	1200	1600	1600	2400	1600	5000	3000	1800
@ 2300°F	2400	2400	2000	2400	4800	1600	2600	3000	2200
@ 2600°F	1000	1000	1100	1900	3700	900	1400	2300	1000
@ 2800°F	600	600	800	1000	1600	700	700	1400	500
Cold Crushing Strength, psi, ASTM C 133									
@ 2800°F	-	-	7000 - 10000	8000 - 10000	9000 - 11000	-	-	8000 - 11000	-
Permanent Linear Change, %, ASTM C 113									
5 hrs. @ 3000°F	-	-3.3	-	-	-	-	-	-0.4	-
5 hrs. @ 3200°F	-	-	-1.3	-0.4	-1.0	-1.9	-0.2	-	-
Deformation Under Hot Load, % @ 25 psi, ASTM C 16									
1½ hrs. @ 2640°F	-	0.4	-	-	0.0	-	-	0.0	-
1½ hrs. @ 2800°F	-	-	-	-	-	-	-	0.2	1.6
1½ hrs. @ 2850°F	-	-	6.0	0.2	0.3	3.6	-	-	-
1½ hrs. @ 3000°F	-	-	-	-	1.3	-	0.5	-	-
Abrasion Loss, cm^3, ASTM C 704	-	10.0	7.0	6.5	4.5	5.0	4.5	4.0	5.0
Coefficient of Reversible Thermal Expansion, in./in.•°F•10^{-6}	3.2	4.2	4.2	4.3	4.0	4.7	5.8	3.4	3.3
Spall Resistance, Relative	good	good	very good	very good	good	fair	low	excellent	very good

Fired Refractory Shapes - Valcor®

MSDS Number	156	152
Technical Datasheet Number	114-20	114-20
Product Name	**Valcor® G**	**Valcor G-AZ**
Chemical Analysis,%, Weight Basis After Firing		
Alumina, Al_2O_3	93	64
Silica, SiO_2	5	12
Zirconia, ZrO_2	-	23
Ferric oxide, Fe_2O_3	0.5	0.2
Titanium oxide, TiO_2	0.7	0.1
Magnesium oxide, MgO	trace	trace
Alkalies, as Na_2O	0.2	0.2
Bulk Density, pcf, ASTM C 134	179	190
Apparent Porosity, %, ASTM C 20	17	17
Permeability, ft/hr•ft^2•in./psi	4	4
Melting Point, °F	3560	3200
Hot Modulus of Rupture, psi, ASTM C 583		
@ 75°F	1600	3000
@ 2300°F	1600	3000
@ 2600°F	900	2300
@ 2800°F	700	1400
Permanent Linear Change, %, ASTM C 113		
5 hrs. @ 3000°F	-	-0.4
5 hrs. @ 3200°F	-1.9	-
Deformation Under Hot Load, % @ 25 psi, ASTM C 16		
1½ hrs. @ 2640°F	-	0.0
1½ hrs. @ 2850°F	3.6	0.2
Abrasion Loss, cm^3, ASTM C 704	5.0	4.0
Coefficient of Reversible Thermal Expansion, in./in.•°F•10^{-6}	4.7	3.4
Spall Resistance, Relative	fair	excellent